ST-1 UMA LOGIC SCHEMATICS

ST-1
VER0.1
June/19/2012

1.TITLE PAGE
2.EC HISTORY
3.CPU(1/16) : DDI/EDP
4.CPU(2/16) : MISC/JTAG
5.CPU(3/16) : DDR3L CHANNEL-A
6.CPU(4/16) : DDR3L CHANNEL-B
7.CPU(5/16) : RTC/HDA/SATA/JTAG
8.CPU(6/16) : CLOCK SIGNALS
9.CPU(7/16) : LPC/SPI/SMBUS/C-LINK
10.CPU(8/16) : SYSTEM PM
11.CPU(9/16) : LCD/PCI/DDI CONTROL
12.CPU(10/16) : GPIO/CPU/MISC/LPIO
13.CPU(11/16) : PCIE/USB
14.CPU(12/16) : POWER
15.CPU(13/16) : POWER
16.CPU(14/16) : GND
17.CPU(15/16) : NCTF
18.CPU(16/16) : CFG/RESERVED
19.DDI-VGA CONVERTER
20.BLANK
21.XDP CONNECTOR
22.RTC BATTERY
23.SPI FLASH
24.DDR3L BASE MEMORY CH-A (1/2)
25.DDR3L BASE MEMORY CH-A (2/2)
26.DDR3L SO DIMM CHANNEL-B
27.BLANK
28.BLANK
29.BLANK
30.BLANK
31.BLANK
32.BLANK
33.BLANK
34.BLANK
35.BLANK
36.BLANK
37.BLANK
38.LCD CONNECTOR
39.BLANK
40.EXT CRT INTERFACE
41.DISPLAY PORT CONNECTOR
42.BLANK
43.SATA HDD CONN
44.BLANK
45.USB POWER/CONN
46.GBE CLARKVILLE
47.GBE LAN SWITCH
48.GBE MAGNETICS
49.RJ45 CONNECTOR
50.PCIE MINI CARD SLOT
51.MEDIA CARD CONTROLLER
52.MEDIA CARD ITERFACE
53.SMART CARD I/F
54.AUDIO ALC3232-GR
55.AUDIO CONNECTOR
56.AUDIO JACK SENSE
57.AUDIO EXT MIC I/F
58.AUDIO SPEAKER
59.AUDIO BEEP
60.DOCKING CONNECTOR
61.MEC1633L(1/3)
62.MEC1633L(2/3)
63.MEC1633L(3/3)
64.KEYBOARD CONNECTOR
65.TOUCH PAD CONNECTOR
66.BLANK
67.FAN CONNECTOR
68.G-SNESOR
69.TPM
70.EEPROM/SMBUS SW
71.THINK ENGINE(1/2)
72.THINK ENGINE(2/2)
73.DC-IN
74.BATTERY INPUT
75.BATTERY CHARGER(BQ24760)
76.CHARGER SELECTOR
77.BATTERY MONITOR
78.DC/DC VCC5M/VCC3M(TPS51220A)
79.DC/DC VCCCPUCORE(VT1320M)
80.DC/DC VCCCPUCORE(VT1334S)
81.BLANK
82.VCCCPUCORE DECOUPLING
83.BLANK
84.BLANK
85.DC/DC VCC1R05AMT(VT356)
86.DC/DC VCC1R35A(VT357)
87.DC/DC VCC0R675B(TPS51200)
88.BLANK
89.BLANK
90.BLANK
91.BLANK
92.DC/DC VCC1R5B(BD3551HFN)
93.LOAD SW PCH SUS
94.LOAD SW LAN
95.BLANK
96.LOAD SW B
97.BLANK
98.LOAD SW WWAN & WLAN
99.PTH FOR SCREW HOLES
100.3rd USB

lenovo

Project Name : STING UMA	Title : TITLE PAGE	
Size : C	Document Number :	Rev : 0.1
Date: Thursday, May 02, 2013	Sheet : 1 of 100	

EC Modify History

Date	EC version	File name
2012/07/24	ST-1_UMA_SDV_EC052-057	JV_ST-1_UMA_SDV_SCH_EC052-057_072401.pdf
2012/07/26	ST-1_UMA_SDV_EC058-066	JV_ST-1_UMA_SDV_SCH_EC058-066_072601.pdf
2012/07/30	ST-1_UMA_SDV_EC067-082	JV_ST-1_UMA_SDV_SCH_EC067-082_073001.pdf
2012/07/31	ST-1_UMA_SDV_EC083-091	JV_ST-1_UMA_SDV_SCH_EC083-094_073101.pdf
2012/07/31	ST-1_UMA_SDV_EC092-094	JV_ST-1_UMA_SDV_SCH_EC083-094_073101.pdf
2012/08/01	ST-1_UMA_SDV_EC095	JV_ST-1_UMA_SDV_SCH_EC095_080101.pdf
2012/08/02	ST-1_UMA_SDV_EC096-099	JV_ST-1_UMA_SDV_SCH_EC096-099_080201.pdf
2012/08/03	ST-1_UMA_SDV_EC100-102	JV_ST-1_UMA_SDV_SCH_EC100-102_080301.pdf
2012/08/06	ST-1_UMA_SDV_EC103-109	JV_ST-1_UMA_SDV_SCH_EC103-109_080601.pdf
2012/08/07	ST-1_UMA_SDV_EC110-120	JV_ST-1_UMA_SDV_SCH_EC110-120_080701.pdf
2012/08/08	ST-1_UMA_SDV_EC121-132	JV_ST-1_UMA_SDV_SCH_EC121-132_080801.pdf
2012/08/09	ST-1_UMA_SDV_EC132-138	JV_ST-1_UMA_SDV_SCH_EC132-138_080901.pdf
2012/08/10	ST-1_UMA_SDV_EC139-142	JV_ST-1_UMA_SDV_SCH_EC139-142_081001.pdf
2012/08/13	ST-1_UMA_SDV_EC143-148	JV_ST-1_UMA_SDV_SCH_EC143-148_081301.pdf
2012/08/14	ST-1_UMA_SDV_EC149	JV_ST-1_UMA_SDV_SCH_EC149_081401.pdf
2012/08/15	ST-1_UMA_SDV_EC150-152	JV_ST-1_UMA_SDV_SCH_EC150-152_081501.pdf
2012/08/16	ST-1_UMA_SDV_EC153-154	JV_ST-1_UMA_SDV_SCH_EC153-154_081601.pdf
2012/08/17	ST-1_UMA_SDV_EC155-166	JV_ST-1_UMA_SDV_SCH_EC155-166_081701.pdf
2012/08/20	ST-1_UMA_SDV_EC167-180	JV_ST-1_UMA_SDV_SCH_EC167-180_082002.pdf
2012/08/21	ST-1_UMA_SDV_EC181-190	JV_ST-1_UMA_SDV_SCH_EC181-190_082101.pdf
2012/08/22	ST-1_UMA_SDV_EC191-193	JV_ST-1_UMA_SDV_SCH_EC191-193_082201.pdf
2012/08/23	ST-1_UMA_SDV_EC194-195	JV_ST-1_UMA_SDV_SCH_EC194-195_082301.pdf
2012/08/24	ST-1_UMA_SDV_EC196	JV_ST-1_UMA_SDV_SCH_EC196_082401.pdf
2012/08/27	ST-1_UMA_SDV_EC197-199	JV_ST-1_UMA_SDV_SCH_EC197-199_082701.pdf
2012/08/28	ST-1_UMA_SDV_EC200-202	JV_ST-1_UMA_SDV_SCH_EC200-202_082801.pdf
2012/08/29	ST-1_UMA_SDV_EC203-209	JV_ST-1_UMA_SDV_SCH_EC203-209_082901.pdf
2012/09/10	ST-1_UMA_SDV_EC210-242	JV_ST-1_UMA_SDV_SCH_EC210-242_091001.pdf
2012/09/13	ST-1_UMA_SDV_EC243-244	JV_ST-1_UMA_SDV_SCH_EC243-244_091301.pdf
2012/09/20	ST-1_UMA_SDV_EC245	JV_ST-1_UMA_SDV_SCH_EC245_092001.pdf
SDV2		
2012/09/25	ST-1_UMA_SDV2_EC001-010	JV_ST-1_UMA_SDV2_SCH_EC001-010_092501.pdf
2012/09/28	ST-1_UMA_SDV2_EC011-017	JV_ST-1_UMA_SDV2_SCH_EC011-017_092801.pdf
2012/10/05	ST-1_UMA_SDV2_EC019-023	JV_ST-1_UMA_SDV2_SCH_EC019-023_100501.pdf
2012/10/11	ST-1_UMA_SDV2_EC024-038	JV_ST-1_UMA_SDV2_SCH_EC024-038_101101.PDF
2012/10/12	ST-1_UMA_SDV2_EC039-043	JV_ST-1_UMA_SDV2_SCH_EC039-043_101201.PDF
2012/10/15	ST-1_UMA_SDV2_EC044-053	JV_ST-1_UMA_SDV2_SCH_EC044-053_101501.PDF
2012/10/15	ST-1_UMA_SDV2_EC054	JV_ST-1_UMA_SDV2_SCH_EC054-_101501.PDF
2012/10/16	ST-1_UMA_SDV2_EC055-056	JV_ST-1_UMA_SDV2_SCH_EC055-056_101601.PDF
2012/10/17	ST-1_UMA_SDV2_EC057-059	JV_ST-1_UMA_SDV2_SCH_EC057-059_101701.PDF
2012/10/19	ST-1_UMA_SDV2_EC060-64	JV_ST-1_UMA_SDV2_SCH_EC060-064_101901.PDF
FVT		
2012/10/29	ST-1_UMA_FVT_EC001-009	JV_ST-1_UMA_FVT_SCH_EC001-009_102901.PDF
2012/10/31	ST-1_UMA_FVT_EC010-012	JV_ST-1_UMA_FVT_SCH_EC010-018_103101.PDF
2012/10/31	ST-1_UMA_FVT_EC013-018	JV_ST-1_UMA_FVT_SCH_EC010-018_103101.PDF
2012/11/2	ST-1_UMA_FVT_EC019-026	JV_ST-1_UMA_FVT_SCH_EC019-026_110201.PDF
2012/11/6	ST-1_UMA_FVT_EC027-042	JV_ST-1_UMA_FVT_SCH_EC027-042_110601.PDF
2012/11/20	ST-1_UMA_FVT_EC043	JV_ST-1_UMA_FVT_BRD_112001.brd
2012/11/8	ST-1_UMA_FVT_EC044-047	JV_ST-1_UMA_FVT_SCH_EC044-47_110801.PDF
2012/11/22	ST-1_UMA_FVT_EC048-069	JV_ST-1_UMA_FVT_SCH_EC048-69_112201.PDF
2012/12/17	ST-1_UMA_FVT_EC070-078	JV_ST-1_UMA_FVT_SCH_EC070-080_121701.PDF
SIT		
2013/01/14	ST-1_UMA_SIT_EC001-020	JV_ST-1_UMA_SIT_SCH_EC001-020_011401.PDF
2013/01/21	ST-1_UMA_SIT_EC021-027	JV_ST-1_UMA_SIT_SCH_EC021-021_012101.PDF
2013/01/29	ST-1_UMA_SIT_EC028-036	JV_ST-1_UMA_SIT_SCH_EC028-036_012901.PDF
2013/01/31	ST-1_UMA_SIT_EC037-042	JV_ST-1_UMA_SIT_SCH_EC037-042_013101.PDF
2013/02/04	ST-1_UMA_SIT_EC043-044	JV_ST-1_UMA_SIT_SCH_EC043-044_020401.PDF
2013/02/07	ST-1_UMA_SIT_EC045-051	JV_ST-1_UMA_SIT_SCH_EC045-051_020701.PDF
2013/03/06	ST-1_UMA_SIT_EC052-057	JV_ST-1_UMA_SIT_SCH_EC052-057_030601.PDF
2013/03/07	ST-1_UMA_SIT_EC058	JV_ST-1_UMA_SIT_SCH_EC058_030701.PDF

Date	EC version	File name
SIT		
2013/03/14	ST-1_UMA_SIT-R2_EC001-009	JV_ST-1_UMA_SIT-R2_SCH_EC001-009_031401.PDF
2013/03/15	ST-1_UMA_SIT-R2_EC010-011	JV_ST-1_UMA_SIT-R2_SCH_EC010-011_031501.PDF

Date	EC version	File name
SVT		
2013/04/19	ST-1_UMA_SVT_EC001-010	JV_ST-1_UMA_SVT_SCH_EC001-010_041901.PDF
2013/04/24	ST-1_UMA_SVT_EC011-012	JV_ST-1_UMA_SVT_SCH_EC011-012_042401.PDF
2013/04/30	ST-1_UMA_SVT_EC013-017	JV_ST-1_UMA_SVT_SCH_EC013-017_043001.PDF

U58 QEK1@
S IC CL8064701462800 QEK1 C0 1.7G BGA
SA00005X400

U58 QEK2@
S IC CL8064701462901 QEK2 C0 1.5G BGA
SA00005X200

U58 QEVE@
S IC CL8064701477702 QEVE C0 1.6G BGA
SA00005X300

U58 QEVF@
S IC CL8064701476302 QEVF C0 1.8G BGA
SA00005XG00

U58 QEK3@
S IC CL8064701463001 QEK3 C0 1.4G BGA
SA00005X000

U58 QEK4@
S IC CL8064701463101 QEK4 C0 1.3G BGA
SA00005VZ00

U58 QEVD@
S IC CL8064701477202 QEVD C0 1.8G BGA
SA00005XH00

U58 QEVG@
S IC CL8064701478202 QEVG C0 1.7G BGA
SA00005VY00

ZZZ
PCB
DAA00004F00

VCCCPUIO_A
R5
24.9_0201_1%

U58A HASWELL_MCP_E

<41> DDIP1_0N — DDIP1_0N — C54 — DDI1_TXN0
<41> DDIP1_0P — DDIP1_0P — C55 — DDI1_TXP0
<41> DDIP1_1N — DDIP1_1N — B58 — DDI1_TXN1
<41> DDIP1_1P — DDIP1_1P — C58 — DDI1_TXP1
<41> DDIP1_2N — DDIP1_2N — B55 — DDI1_TXN2
<41> DDIP1_2P — DDIP1_2P — A55 — DDI1_TXP2
<41> DDIP1_3N — DDIP1_3N — A57 — DDI1_TXN3
<41> DDIP1_3P — DDIP1_3P — B57 — DDI1_TXP3

DDIP2_0N — C51 — DDI2_TXN0
DDIP2_0P — C50 — DDI2_TXP0
DDIP2_1N — C53 — DDI2_TXN1
DDIP2_1P — B54 — DDI2_TXP1
<60> DDIP2_2N — C49 — DDI2_TXN2
<60> DDIP2_2P — B50 — DDI2_TXP2
<60> DDIP2_3N — A53 — DDI2_TXN3
<60> DDIP2_3P — B53 — DDI2_TXP3

DDI — EDP

EDP_TXN0 — C45 — EDP_TXN0 <38>
EDP_TXP0 — B46 — EDP_TXP0 <38>
EDP_TXN1 — A47 — EDP_TXN1 <38>
EDP_TXP1 — B47 — EDP_TXP1 <38>
EDP_TXN2 — C47
EDP_TXP2 — C46
EDP_TXN3 — A49
EDP_TXP3 — B49
EDP_AUXN — A45 — EDP_AUXN <38>
EDP_AUXP — B45 — EDP_AUXP <38>
EDP_RCOMP — D20 — EDP_COMP
EDP_DISP_UTIL — A43

1 OF 19 Rev0p7

HASWELL-MCP-E-ULT_BGA1168

2+3@

<19,60> -DOCK_ATTACHED_3B

VCC3B
1U_0201_6.3V6
U_C595
1000P_0201_25V7K
U_C596
1000P_0201_25V7K
U_C597

U108
XSD — B0_P — 19 — DOCK_DDIP2_1P <60>
SEL — B0_N — 18 — DOCK_DDIP2_1N <60>
B1_P — 17 — DOCK_DDIP2_0P <60>
B1_N — 16 — DOCK_DDIP2_0N <60>
DDIP2_1P — A0_P — 15 — DP2VGA_DDIP2_1P <19>
DDIP2_1N — A0_N — 14 — DP2VGA_DDIP2_1N <19>
DDIP2_0P — A1_P — 13 — DP2VGA_DDIP2_0P <19>
DDIP2_0N — A1_N — 12 — DP2VGA_DDIP2_0N <19>
C0_P
C0_N
C1_P
C1_N
GND — 5
VDD — GND — 11
VDD — GND — 20
VDD — THERMAL PAD — 21
CBTL02042ABQ_DHVQFN20_2P5X4P5

Vendor	P/N
Pericom	PI3PCIE3212
NXP	CBTL02042ABQ

VCC3B
U_R957
100K_0201_5%

VCC5B
U_C598
0.1U_0201_6.3V6K

U_U2
<11> DDIP2_AUXP — 4 — 1A
<11> DDIP2_AUXN — 7 — 2A
9 — 3A
<11> DDIP2_HPD — 12 — 4A
-DOCK_ATTACHED_3B — 15 — OE
1 — S
8 — GND
17 — T-PAD
Vcc — 16
1B1 — 2 — DOCK_DDIP2_AUXP <60>
1B2 — 3 — DP2VGA_DDIP2_AUXP <19>
2B1 — 5 — DOCK_DDIP2_AUXN <60>
2B2 — 6 — DP2VGA_DDIP2_AUXN <19>
3B1 — 11
3B2 — 10
4B1 — 14 — DOCK_DDIP2_HPD <60>
4B2 — 13 — DP2VGA_DDIP2_HPD <19>
CBT3257ABQ_DHVQFN16_2P5X3P5

U_R958
100K_0201_5%
@

Vendor	P/N
NXP	CBT3257ABQ
On-semi	74FST3257MNTWG

Security Classification	LC Future Center Secret Data		
Issued Date	2012/05/01	Deciphered Date	2012/12/01

THIS SHEET OF ENGINEERING DRAWING IS THE PROPRIETARY PROPERTY OF LC FUTURE CENTER. AND CONTAINS CONFIDENTIAL AND TRADE SECRET INFORMATION. THIS SHEET MAY NOT BE TRANSFERED FROM THE CUSTODY OF THE COMPETENT DIVISION OF R&D DEPARTMENT EXCEPT AS AUTHORIZED BY LC FUTURE CENTER NEITHER THIS SHEET NOR THE INFORMATION IT CONTAINS MAY BE USED BY OR DISCLOSED TO ANY THIRD PARTY WITHOUT PRIOR WRITTEN CONSENT OF LC FUTURE CENTER.

Title: CPU(1/16) : DDI/EDP

LCFC

Size: Custom | Document Number: STING UMA | Rev: 0.1

Date: Thursday, May 02, 2013 | Sheet 3 of 100

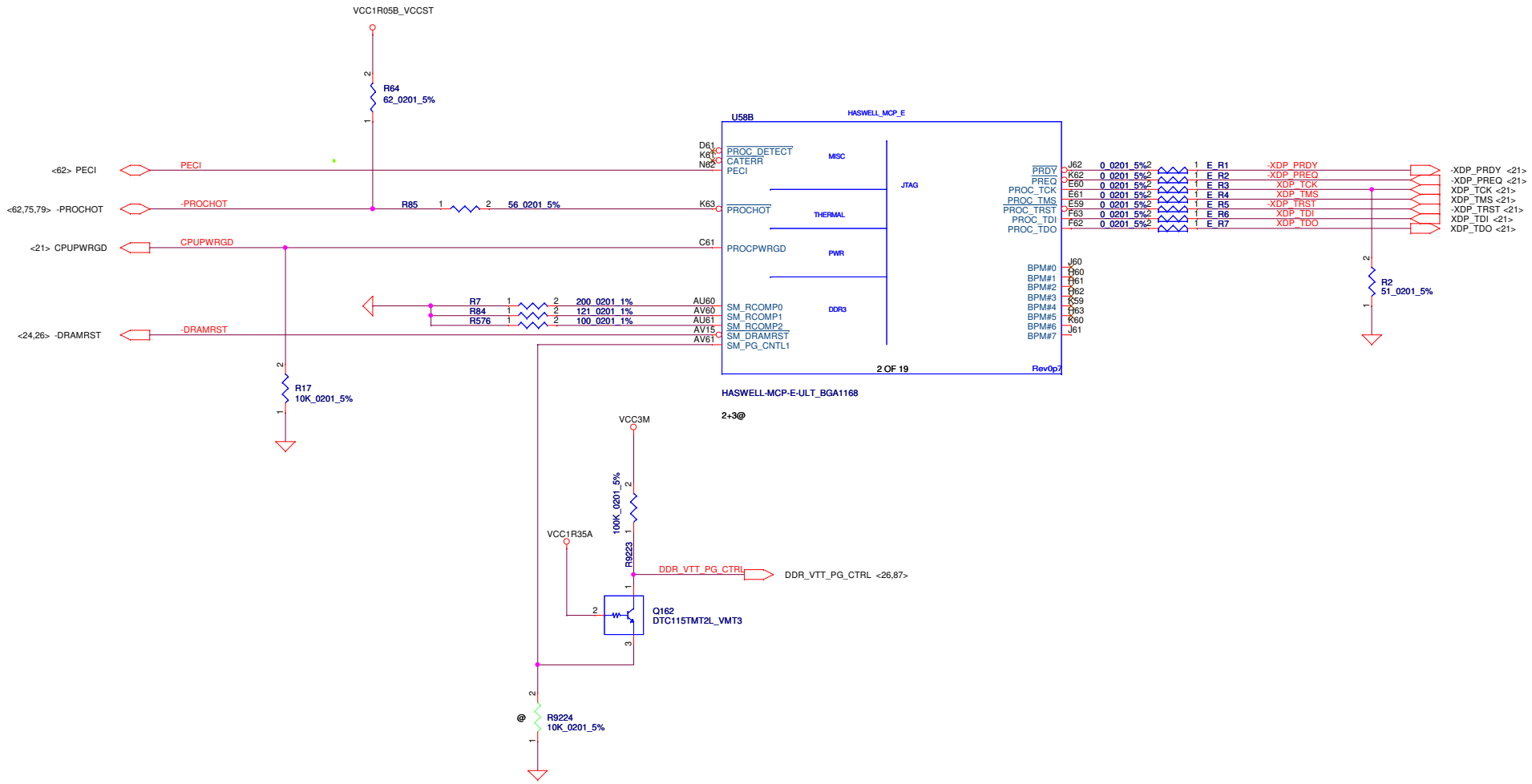

Security Classification	LC Future Center Secret Data		
Issued Date	2012/05/01	Deciphered Date	2012/12/01

THIS SHEET OF ENGINEERING DRAWING IS THE PROPRIETARY PROPERTY OF LC FUTURE CENTER. AND CONTAINS CONFIDENTIAL AND TRADE SECRET INFORMATION. THIS SHEET MAY NOT BE TRANSFERED FROM THE CUSTODY OF THE COMPETENT DIVISION OF R&D DEPARTMENT EXCEPT AS AUTHORIZED BY LC FUTURE CENTER NEITHER THIS SHEET NOR THE INFORMATION IT CONTAINS MAY BE USED BY OR DISCLOSED TO ANY THIRD PARTY WITHOUT PRIOR WRITTEN CONSENT OF LC FUTURE CENTER.

Title: CPU(2/16) : MISC/JTAG

LCFC

Size: Custom | Document Number: STING UMA | Rev: 0.1

Date: Thursday, May 02, 2013 | Sheet 4 of 100

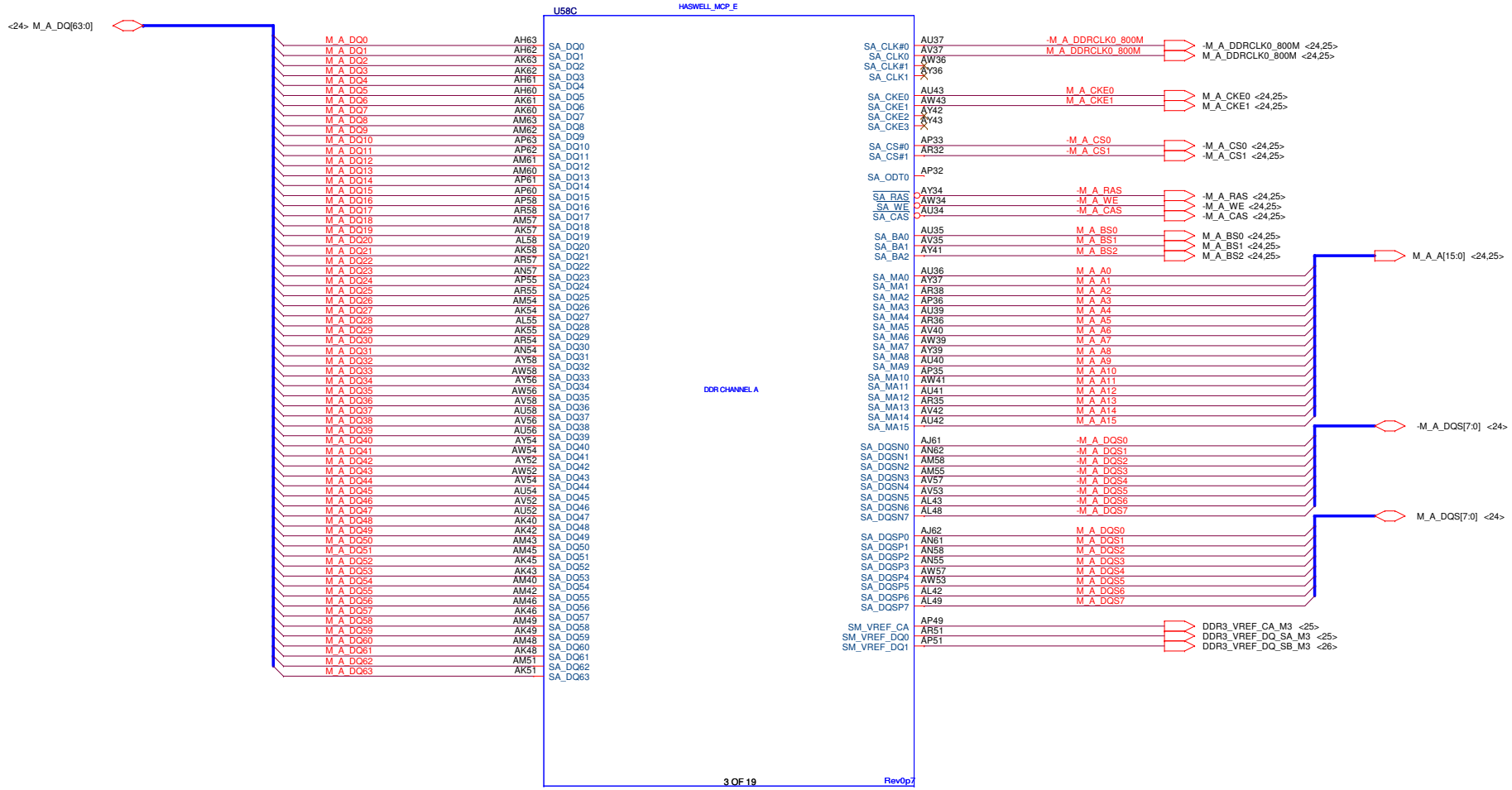

Security Classification	LC Future Center Secret Data		
Issued Date	2012/05/01	Deciphered Date	2012/12/01

THIS SHEET OF ENGINEERING DRAWING IS THE PROPRIETARY PROPERTY OF LC FUTURE CENTER. AND CONTAINS CONFIDENTIAL AND TRADE SECRET INFORMATION. THIS SHEET MAY NOT BE TRANSFERED FROM THE CUSTODY OF THE COMPETENT DIVISION OF R&D DEPARTMENT EXCEPT AS AUTHORIZED BY LC FUTURE CENTER NEITHER THIS SHEET NOR THE INFORMATION IT CONTAINS MAY BE USED BY OR DISCLOSED TO ANY THIRD PARTY WITHOUT PRIOR WRITTEN CONSENT OF LC FUTURE CENTER.

Title: **CPU(3/16) : DDR3L CHANNEL-A**

LCFC

Size: Custom | Document Number: STING UMA | Rev: 0.1

Date: Thursday, May 02, 2013 | Sheet 5 of 100

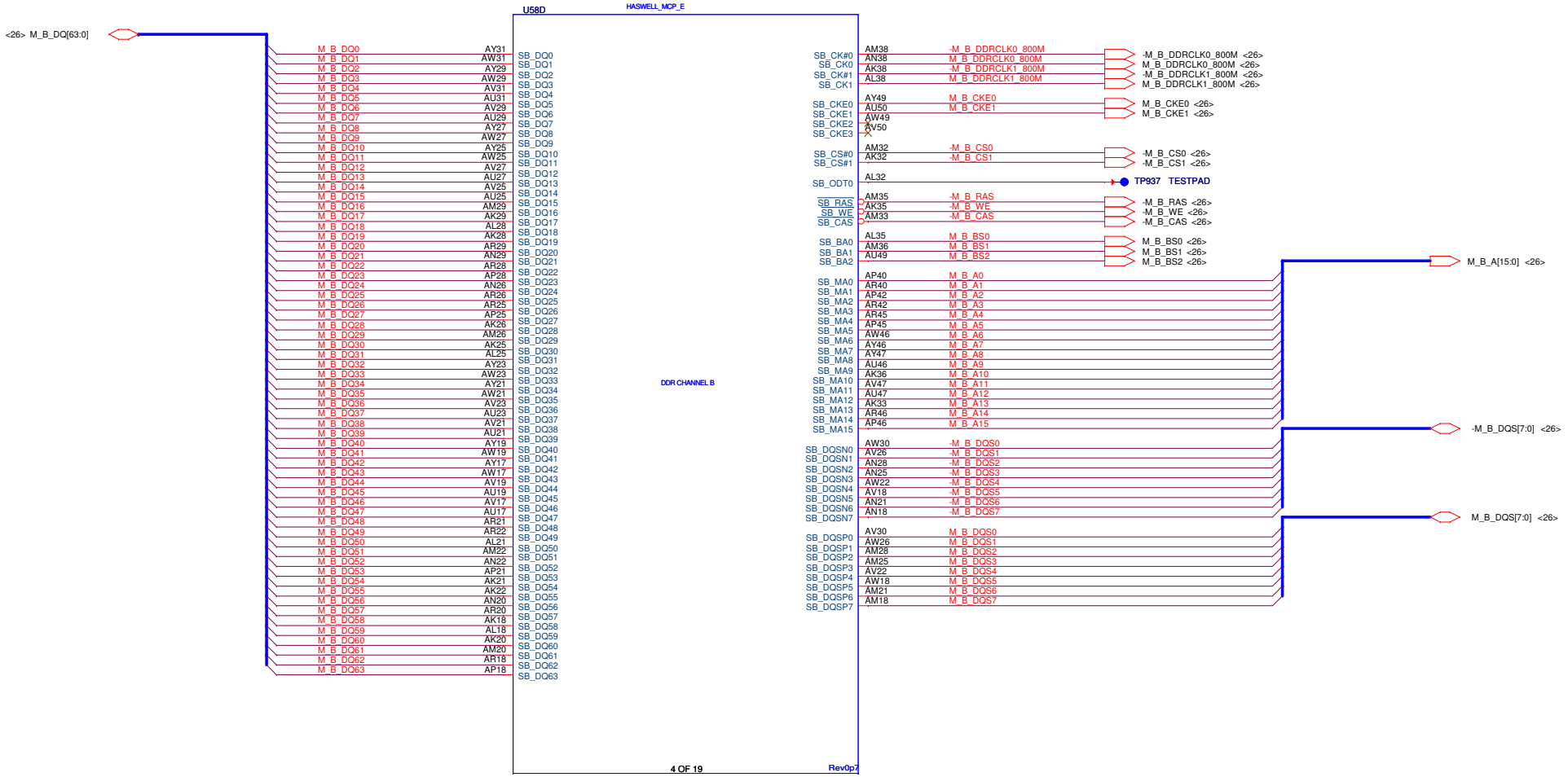

HASWELL-MCP-E-ULT_BGA1168

2+3@

Security Classification	LC Future Center Secret Data		
Issued Date	2012/05/01	Deciphered Date	2012/12/01

THIS SHEET OF ENGINEERING DRAWING IS THE PROPRIETARY PROPERTY OF LC FUTURE CENTER. AND CONTAINS CONFIDENTIAL AND TRADE SECRET INFORMATION. THIS SHEET MAY NOT BE TRANSFERED FROM THE CUSTODY OF THE COMPETENT DIVISION OF R&D DEPARTMENT EXCEPT AS AUTHORIZED BY LC FUTURE CENTER NEITHER THIS SHEET NOR THE INFORMATION IT CONTAINS MAY BE USED BY OR DISCLOSED TO ANY THIRD PARTY WITHOUT PRIOR WRITTEN CONSENT OF LC FUTURE CENTER.

Title: CPU(4/16) : DDR3L CHANNEL-B

LCFC

Size: Custom | Document Number: STING UMA | Rev: 0.1

Date: Thursday, May 02, 2013 | Sheet 6 of 100

SATA Port Assignment	
0	HDD Connector
1	NGFF WWAN Slot
2	NGFF Slot at Palmrest

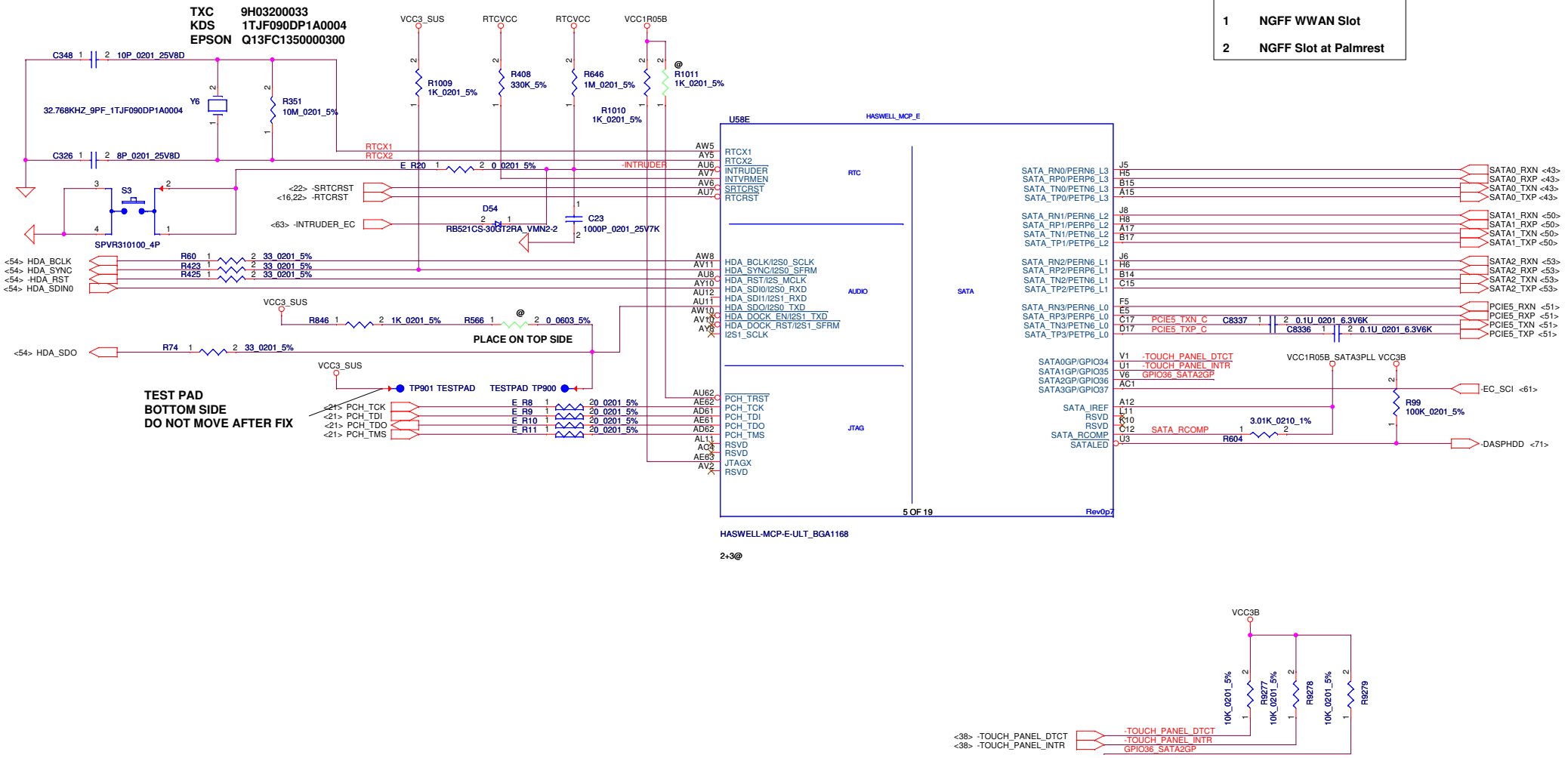

Security Classification	LC Future Center Secret Data		
Issued Date	2012/05/01	Deciphered Date	2012/12/01

THIS SHEET OF ENGINEERING DRAWING IS THE PROPRIETARY PROPERTY OF LC FUTURE CENTER. AND CONTAINS CONFIDENTIAL AND TRADE SECRET INFORMATION. THIS SHEET MAY NOT BE TRANSFERED FROM THE CUSTODY OF THE COMPETENT DIVISION OF R&D DEPARTMENT EXCEPT AS AUTHORIZED BY LC FUTURE CENTER NEITHER THIS SHEET NOR THE INFORMATION IT CONTAINS MAY BE USED BY OR DISCLOSED TO ANY THIRD PARTY WITHOUT PRIOR WRITTEN CONSENT OF LC FUTURE CENTER.

Title: CPU(5/16) : RTC/HDA/SATA/JTAG

LCFC

Size: Custom | Document Number: STING UMA | Rev: 0.1

Date: Thursday, May 02, 2013 | Sheet 7 of 100

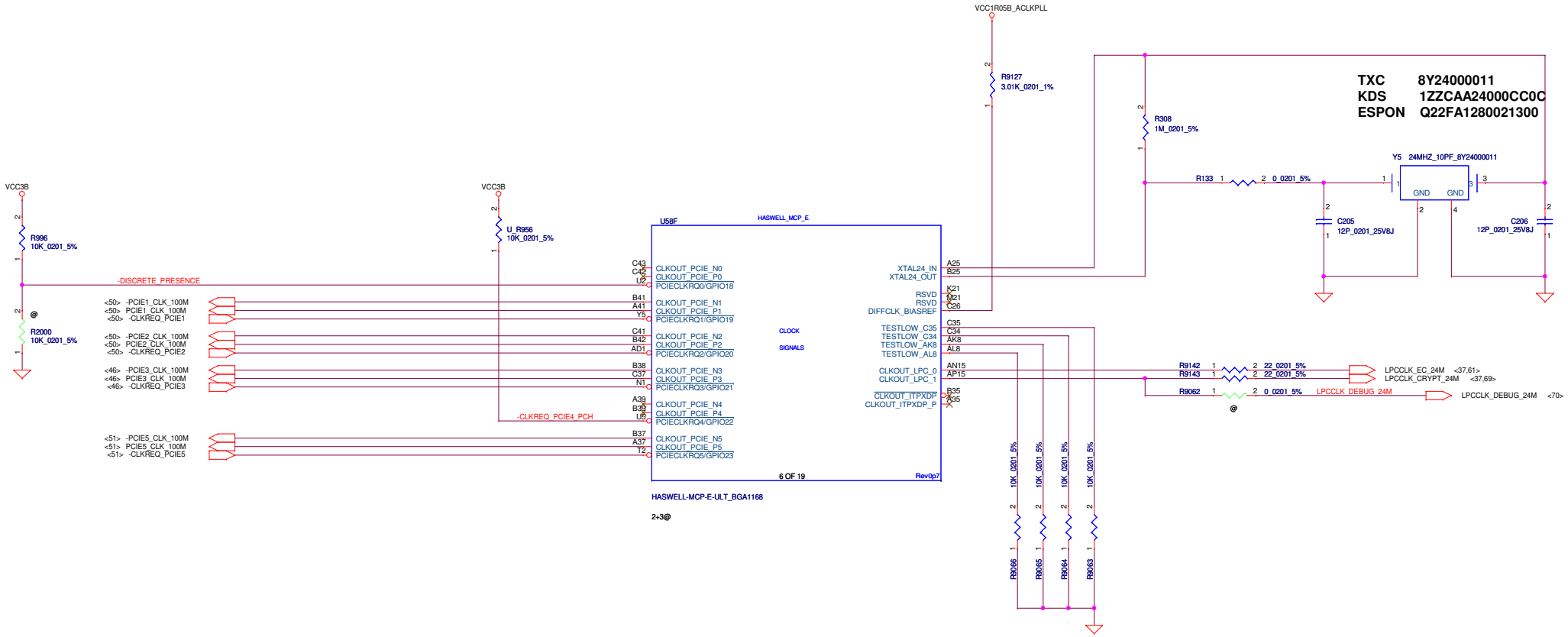

Security Classification	LC Future Center Secret Data		
Issued Date	2012/05/01	Deciphered Date	2012/12/01

THIS SHEET OF ENGINEERING DRAWING IS THE PROPRIETARY PROPERTY OF LC FUTURE CENTER. AND CONTAINS CONFIDENTIAL AND TRADE SECRET INFORMATION. THIS SHEET MAY NOT BE TRANSFERED FROM THE CUSTODY OF THE COMPETENT DIVISION OF R&D DEPARTMENT EXCEPT AS AUTHORIZED BY LC FUTURE CENTER NEITHER THIS SHEET NOR THE INFORMATION IT CONTAINS MAY BE USED BY OR DISCLOSED TO ANY THIRD PARTY WITHOUT PRIOR WRITTEN CONSENT OF LC FUTURE CENTER.

Title: CPU(6/16) : CLOCK SIGNALS

Size: Custom | Document Number: STING UMA | Rev: 0.1

Date: Thursday, May 02, 2013 | Sheet 8 of 100

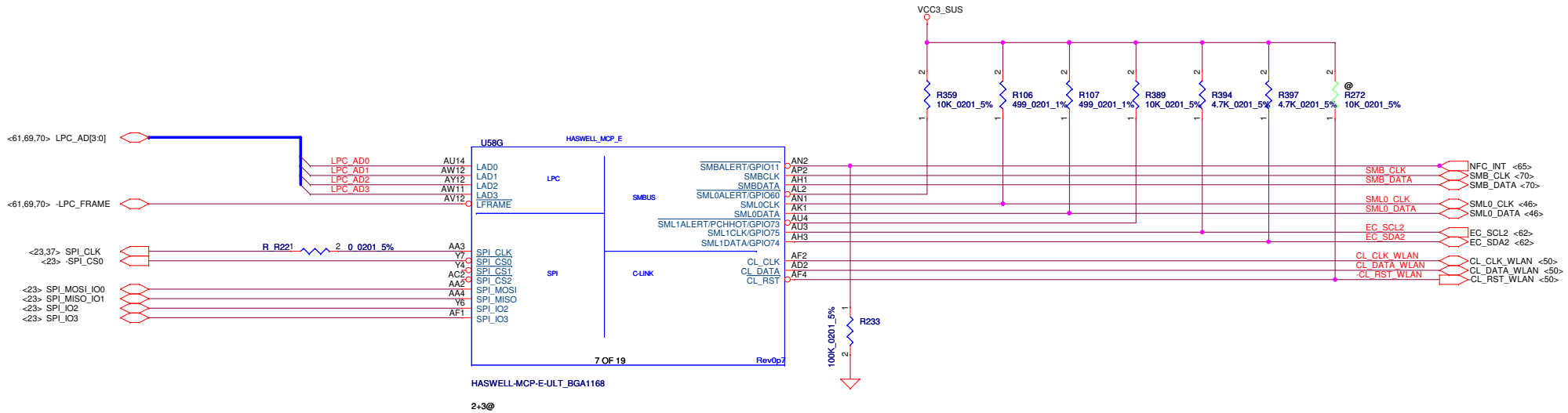

Security Classification	LC Future Center Secret Data		
Issued Date	2012/05/01	Deciphered Date	2012/12/01

THIS SHEET OF ENGINEERING DRAWING IS THE PROPRIETARY PROPERTY OF LC FUTURE CENTER. AND CONTAINS CONFIDENTIAL AND TRADE SECRET INFORMATION. THIS SHEET MAY NOT BE TRANSFERED FROM THE CUSTODY OF THE COMPETENT DIVISION OF R&D DEPARTMENT EXCEPT AS AUTHORIZED BY LC FUTURE CENTER NEITHER THIS SHEET NOR THE INFORMATION IT CONTAINS MAY BE USED BY OR DISCLOSED TO ANY THIRD PARTY WITHOUT PRIOR WRITTEN CONSENT OF LC FUTURE CENTER.

Title: CPU(7/16) : LPC/SPI/SMBUS/C-LINK

Size: Custom | Document Number: STING UMA | Rev: 0.1

Date: Thursday, May 02, 2013 | Sheet 9 of 100

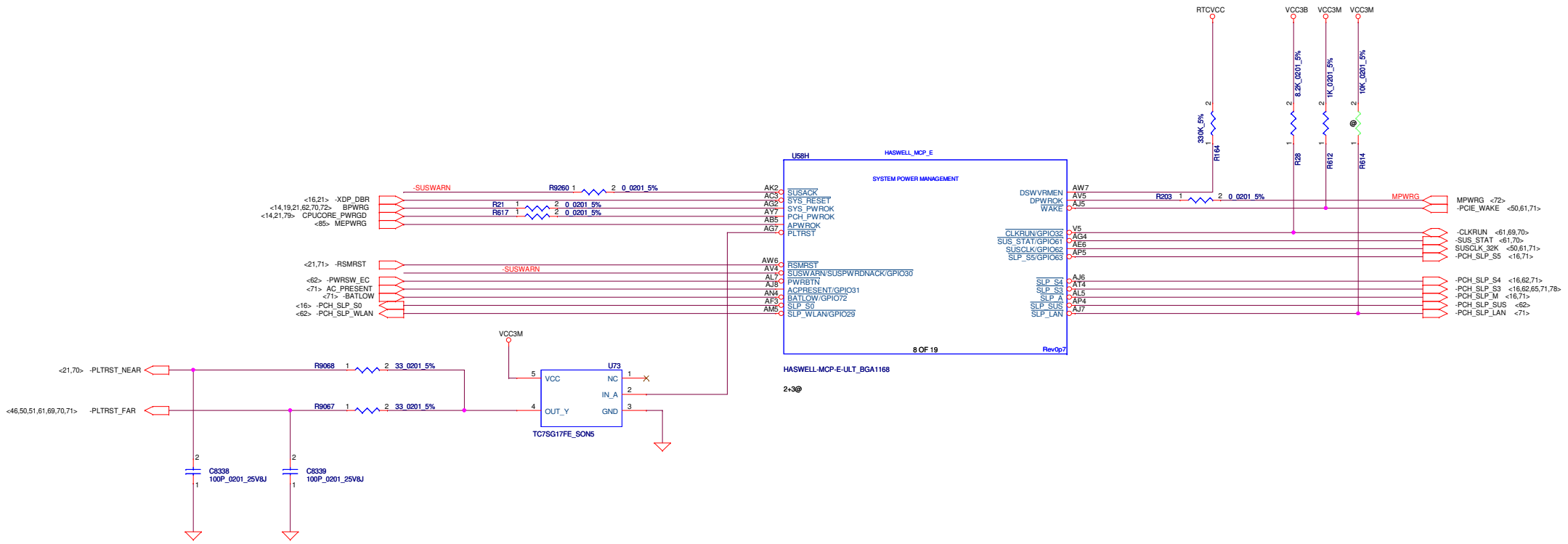

TABLE

CFG2 : PEG Static Lane Reversal
- 1 : Normal Operation
- 0 : Lane Reversal

CFG4 : Display Port Presence
- 1 : Disabled
- 0 : Enabled

CFG[6:5] : PEG Bifurcation
- 11 : Func 1 Disabled, Func 2 Disabled (x16,---,---)
- 10 : Func 1 Enabled, Func 2 Disabled (x8,x8,---)
- 01 : Func 1 Disabled, Func 2 Enabled
- 00 : Func 1 Enabled, Func 2 Enabled (x8,x4,x4)

CFG7 : PEG Defer Training
- 1 : PEG Train Immediately Following XXRESETB Deassertion
- 0 : PEG Wait for BIOS for Training

Security Classification	LC Future Center Secret Data		
Issued Date	2012/05/01	Deciphered Date	2012/12/01

THIS SHEET OF ENGINEERING DRAWING IS THE PROPRIETARY PROPERTY OF LC FUTURE CENTER. AND CONTAINS CONFIDENTIAL AND TRADE SECRET INFORMATION. THIS SHEET MAY NOT BE TRANSFERED FROM THE CUSTODY OF THE COMPETENT DIVISION OF R&D DEPARTMENT EXCEPT AS AUTHORIZED BY LC FUTURE CENTER NEITHER THIS SHEET NOR THE INFORMATION IT CONTAINS MAY BE USED BY OR DISCLOSED TO ANY THIRD PARTY WITHOUT PRIOR WRITTEN CONSENT OF LC FUTURE CENTER.

Title: CPU(8/16) : SYSTEM PM

Size: Custom | Document Number: STING UMA | Rev: 0.1

Date: Thursday, May 02, 2013 | Sheet 10 of 100

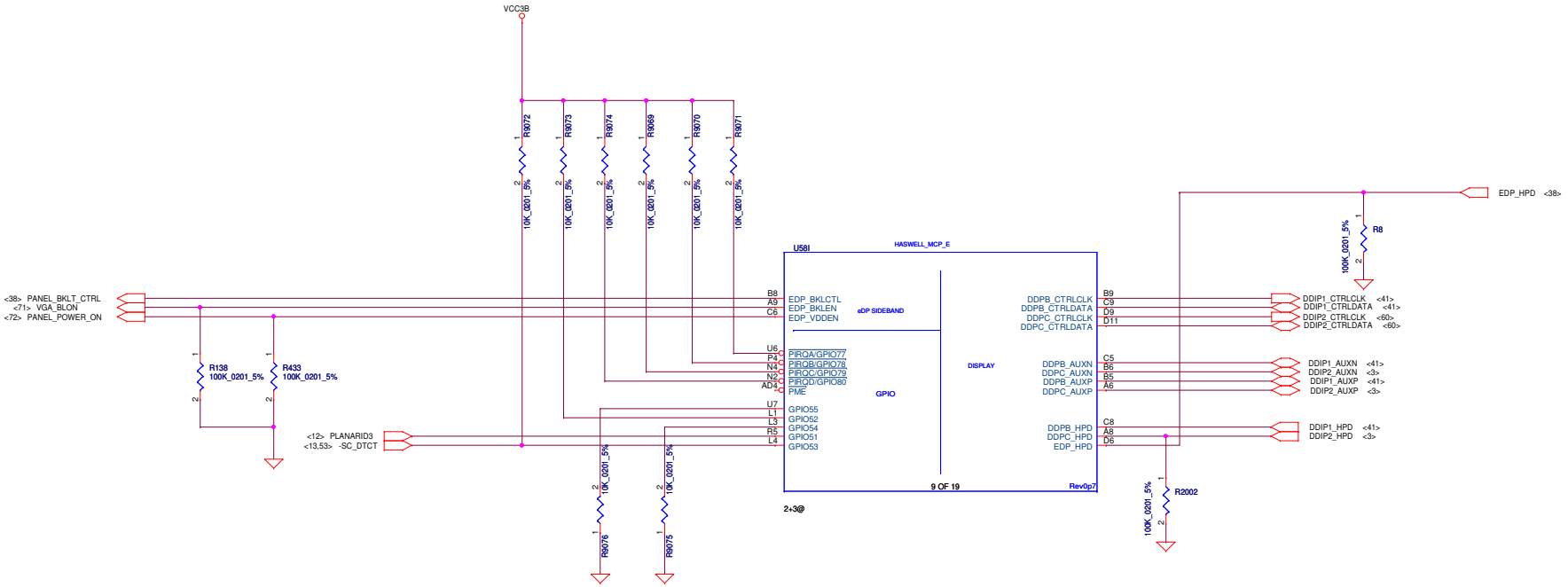

Security Classification	LC Future Center Secret Data		
Issued Date	2012/05/02	Deciphered Date	2012/5/02

THIS SHEET OF ENGINEERING DRAWING IS THE PROPRIETARY PROPERTY OF LC FUTURE CENTER. AND CONTAINS CONFIDENTIAL AND TRADE SECRET INFORMATION. THIS SHEET MAY NOT BE TRANSFERED FROM THE CUSTODY OF THE COMPETENT DIVISION OF R&D DEPARTMENT EXCEPT AS AUTHORIZED BY LC FUTURE CENTER NEITHER THIS SHEET NOR THE INFORMATION IT CONTAINS MAY BE USED BY OR DISCLOSED TO ANY THIRD PARTY WITHOUT PRIOR WRITTEN CONSENT OF LC FUTURE CENTER.

Title
CPU(9/16) : LCD/PCI/DDI CONTROL

Size	Document Number	Rev
C		0.1

Date: Thursday, May 02, 2013 | Sheet 11 of 100

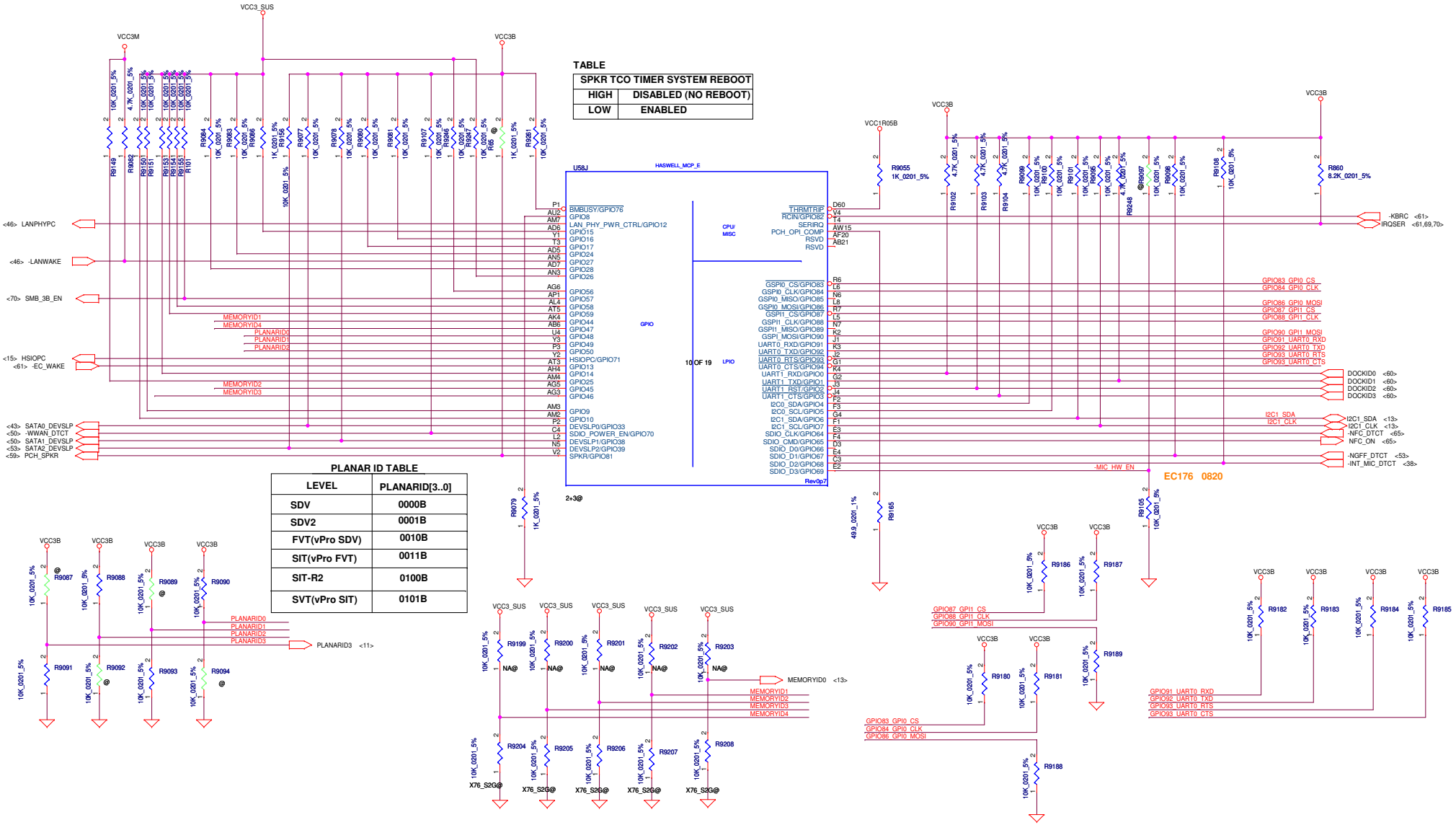

TABLE

SPKR TCO TIMER SYSTEM REBOOT	
HIGH	DISABLED (NO REBOOT)
LOW	ENABLED

PLANAR ID TABLE

LEVEL	PLANARID[3..0]
SDV	0000B
SDV2	0001B
FVT(vPro SDV)	0010B
SIT(vPro FVT)	0011B
SIT-R2	0100B
SVT(vPro SIT)	0101B

MemoryID0	MemoryID1	MemoryID2	MemoryID3	MemoryID4	Supplier	Density	P/N	BOM Structure
GPIO43#	GPIO44	GPIO45	GPIO46	GPIO47				
0	0	0	0	0	Samsung	4Gb	K4B4G1646B-HYK0	S2G@
0	0	1	0	0	Hynix	4Gb	H5TC4G63AFR-PBA	H2G@
0	1	0	0	0	Micron	4Gb	MT41K256M16HA-125:E	M2G@
1	0	0	0	0	Samsung	8Gb	K4B8G1646B-MYK0	S4G@
1	1	0	0	0	Micron	8Gb	MT41K512M16TNA-125:E	M4G@
1	1	1	0	0	Elpida	8Gb	EDJ8416E6MB-GN-F	E4G@
1	1	1	1	1	no on-board memory model	N/A	N/A	NA@

MemoryID0 GPIO43#	MemoryID1 GPIO44	MemoryID2 GPIO45	MemoryID3 GPIO46	MemoryID4 GPIO47	Supplier	Density	P/N
0	0	0	0	0	Samsung	4Gb	K4B4G1646B-HYK0
0	0	1	0	0	Hynix	4Gb	H5TC4G63AFR-PBA
0	1	0	0	0	Micron	4Gb	MT41K256M16HA-125:E
1	0	0	0	0	Samsung	8Gb	K4B8G1646B-MYK0
1	1	0	0	0	Micron	8Gb	MT41K512M16TNA-125:E
1	1	1	0	0	Elpida	8Gb	EDJ8416E6MB-GN-F
1	1	1	1	1	no on-board memory model	N/A	N/A

THIS SHEET OF ENGINEERING DRAWING IS THE PROPRIETARY PROPERTY OF LC FUTURE CENTER. AND CONTAINS CONFIDENTIAL AND TRADE SECRET INFORMATION. THIS SHEET MAY NOT BE TRANSFERED FROM THE CUSTODY OF THE COMPETENT DIVISION OF R&D DEPARTMENT EXCEPT AS AUTHORIZED BY LC FUTURE CENTER NEITHER THIS SHEET NOR THE INFORMATION IT CONTAINS MAY BE USED BY OR DISCLOSED TO ANY THIRD PARTY WITHOUT PRIOR WRITTEN CONSENT OF LC FUTURE CENTER.

Security Classification	LC Future Center Secret Data		
Issued Date	2012/05/02	Deciphered Date	2012/5/02

Title: CPU(10/16) : GPIO/CPU/MISC/LPIO

Size: C | Document Number | Rev: 0.1

Date: Thursday, May 02, 2013 | Sheet 12 of 100

Flexible I/O Configuration			
I/O	High Speed Signals	Configuration	Net Name
Port 1	USB3 1	USB3 1	USB3P0
Port 2	USB3 2	USB3 2	USB3P1
Port 3	PCIE 1/USB3 3	USB3 3	USB3P2
Port 4	PCIE 2/USB3 4	PCIE 2	PCIE1
Port 5	PCIE 3	PCIE 3	PCIE2
Port 6	PCIE 4	PCIE 4	PCIE3
Port 7	PCIE 5 L0	PCIE 5 L0	PCIE4_0
Port 8	PCIE 5 L1	PCIE 5 L1	PCIE4_1
Port 9	PCIE 5 L2	PCIE 5 L2	PCIE4_2
Port 10	PCIE 5 L3	PCIE 5 L3	PCIE4_3
Port 11	PCIE 6 L0	PCIE 6 L0	PCIE5
Port 12	SATA 2/PCIE 6 L1	SATA 2	SATA2
Port 13	SATA 1/PCIE 6 L2	SATA 1	SATA1
Port 14	SATA 0/PCIE 6 L3	SATA 0	SATA0

PCIe Port Assignment
1 NGFF WLAN Slot Port1
2 NGFF WLAN Slot Port0
3 GbE PHY
4 (x4) Reserve
5 (x1) Media Card Controller

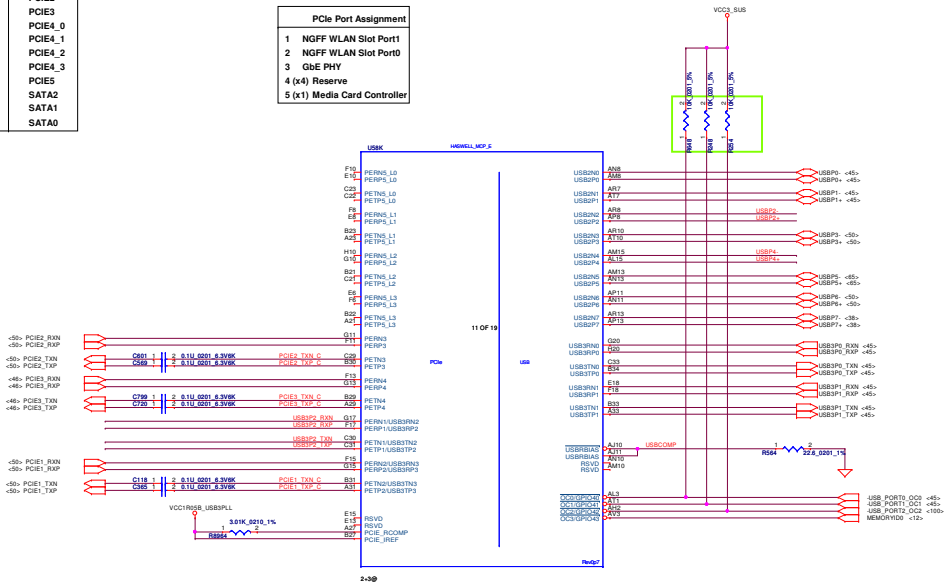

USB Port Assignment
0 USB 3.0 System Port (AOU)
1 USB 3.0 System Port (Debug)
2 USB 3.0 Docking/3rd USB3.0 System Port
3 NGFF WWAN Slot
4 Smart Card Slot / Touch Panel
5 Fingerprint Reader
6 NGFF WLAN Slot
7 USB Camera

USB 3.0 Port Assignment
0 USB 3.0 System Port (AOU)
1 USB 3.0 System Port (Debug)
2 USB 3.0 Docking/3rd USB3.0 System Port

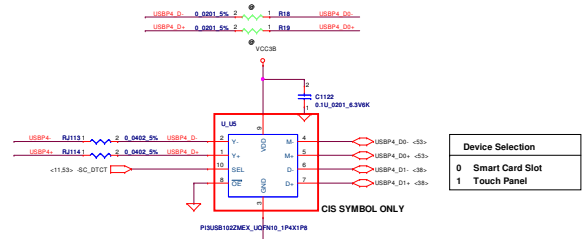

Device Selection
0 Smart Card Slot
1 Touch Panel

PN Apply

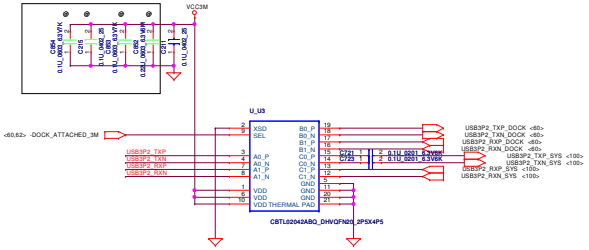

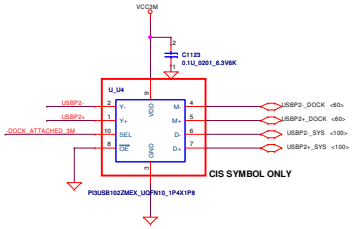

Vendor	P/N
Pericom	PI3USB102ZME
NXP	NX3DV42GU

Vendor	P/N
Pericom	PI3PCIE3212
NXP	CBTL02043ABQ

Security Classification	LC Future Center Secret Data		Title
Issued Date	2012/05/02	Deciphered Date 2012/5/02	CPU(11/16) : PCIE/USB

THIS SHEET OF ENGINEERING DRAWING IS THE PROPRIETARY PROPERTY OF LC FUTURE CENTER, AND CONTAINS CONFIDENTIAL AND TRADE SECRET INFORMATION. THIS SHEET MAY NOT BE TRANSFERED FROM THE CUSTODY OF THE COMPETENT DIVISION OF R&D DEPARTMENT EXCEPT AS AUTHORIZED BY LC FUTURE CENTER NEITHER THIS SHEET NOR THE INFORMATION IT CONTAINS MAY BE USED BY OR DISCLOSED TO ANY THIRD PARTY WITHOUT PRIOR WRITTEN CONSENT OF LC FUTURE CENTER.

Size D | Document Number | Rev 0.1

Date: Monday, May 06, 2013 | Sheet 13 of 100

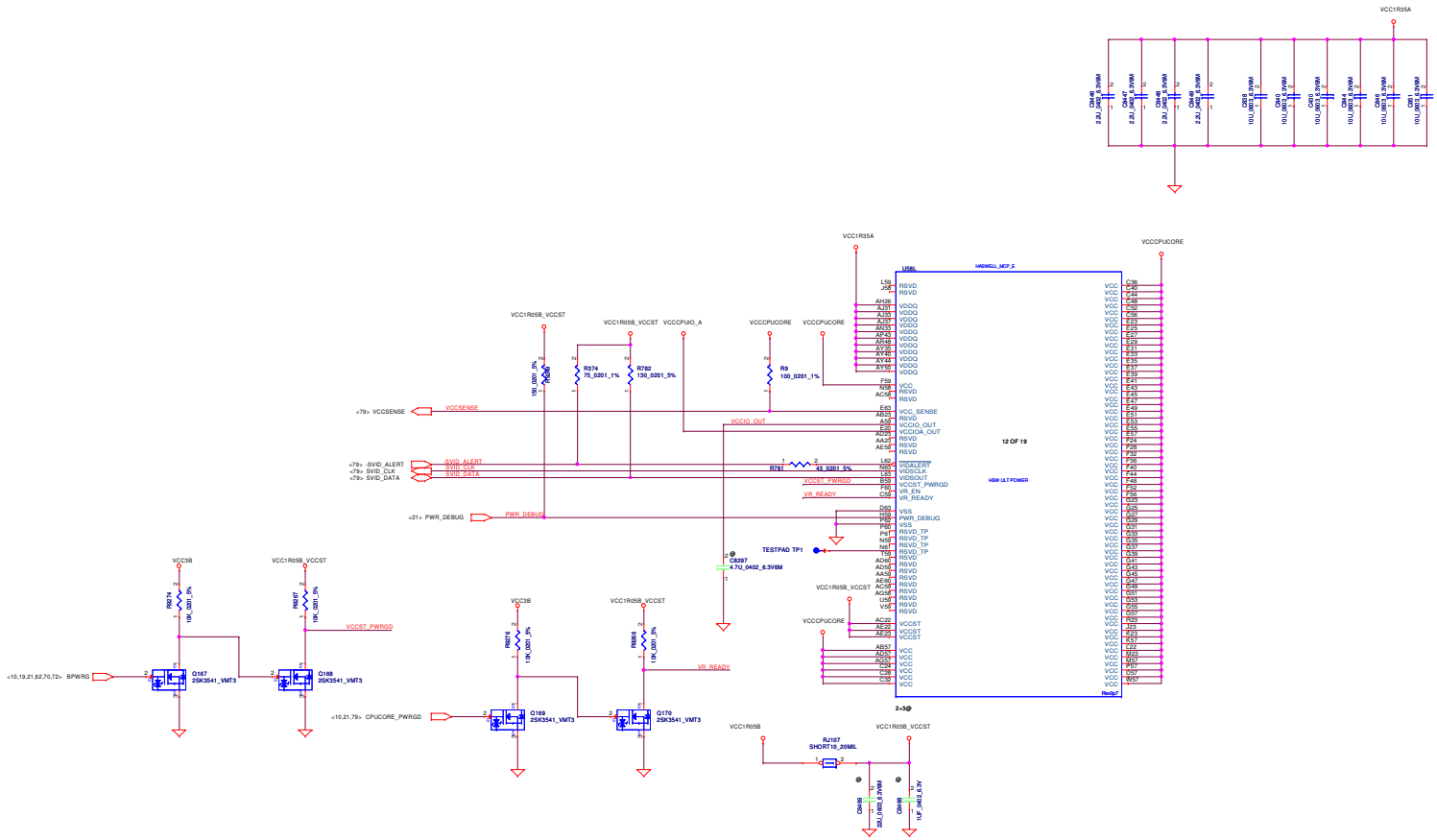

Security Classification	LC Future Center Secret Data		
Issued Date	2012/05/02	Deciphered Date	2012/5/02

THIS SHEET OF ENGINEERING DRAWING IS THE PROPRIETARY PROPERTY OF LC FUTURE CENTER, AND CONTAINS CONFIDENTIAL AND TRADE SECRET INFORMATION. THIS SHEET MAY NOT BE TRANSFERRED FROM THE CUSTODY OF THE COMPETENT DIVISION OF R&D DEPARTMENT EXCEPT AS AUTHORIZED BY LC FUTURE CENTER NEITHER THIS SHEET NOR THE INFORMATION IT CONTAINS MAY BE USED BY OR DISCLOSED TO ANY THIRD PARTY WITHOUT PRIOR WRITTEN CONSENT OF LC FUTURE CENTER.

Title: **CPU(12/16) : POWER**

Size	Document Number	Rev
D	C	0.1

Date: Monday, May 06, 2013 Sheet 14 of 100

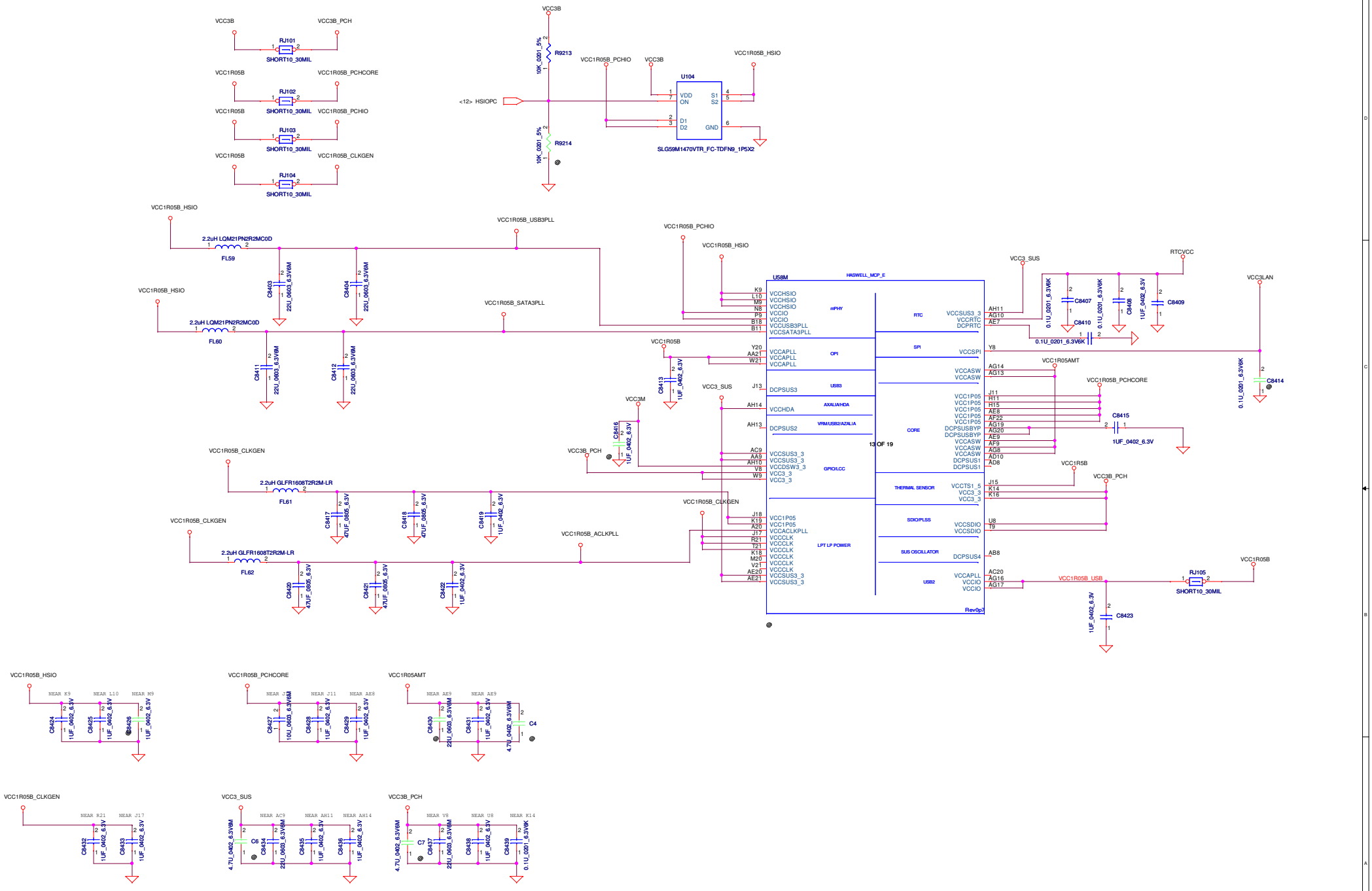

Security Classification	LC Future Center Secret Data		
Issued Date	2012/05/02	Deciphered Date	2012/5/02

THIS SHEET OF ENGINEERING DRAWING IS THE PROPRIETARY PROPERTY OF LC FUTURE CENTER, AND CONTAINS CONFIDENTIAL AND TRADE SECRET INFORMATION. THIS SHEET MAY NOT BE TRANSFERED FROM THE CUSTODY OF THE COMPETENT DIVISION OF R&D DEPARTMENT EXCEPT AS AUTHORIZED BY LC FUTURE CENTER NEITHER THIS SHEET NOR THE INFORMATION IT CONTAINS MAY BE USED BY OR DISCLOSED TO ANY THIRD PARTY WITHOUT PRIOR WRITTEN CONSENT OF LC FUTURE CENTER.

Title: CPU(13/16) : POWER

Size: custom | Document Number | Rev: 0.1

Date: Thursday, May 02, 2013 | Sheet 15 of 100

APS/PETS interface

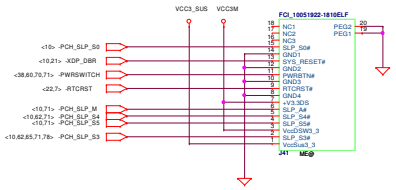

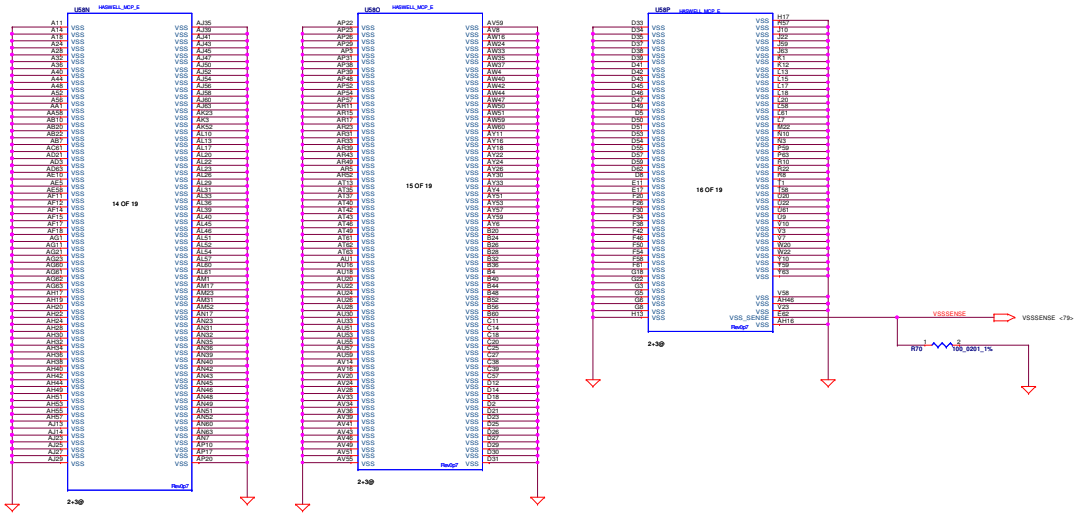

Security Classification	LC Future Center Secret Data		Title
Issued Date	2012/05/02	Deciphered Date 2012/5/02	CPU(14/16) : GND

THIS SHEET OF ENGINEERING DRAWING IS THE PROPRIETARY PROPERTY OF LC FUTURE CENTER, AND CONTAINS CONFIDENTIAL AND TRADE SECRET INFORMATION. THIS SHEET MAY NOT BE TRANSFERRED FROM THE CUSTODY OF THE COMPETENT DIVISION OF R&D DEPARTMENT EXCEPT AS AUTHORIZED BY LC FUTURE CENTER NEITHER THIS SHEET NOR THE INFORMATION IT CONTAINS MAY BE USED BY OR DISCLOSED TO ANY THIRD PARTY WITHOUT PRIOR WRITTEN CONSENT OF LC FUTURE CENTER.

Size: D | Document Number | Rev: 0.1

Date: Friday, May 02, 2014 | Sheet 16 of 100

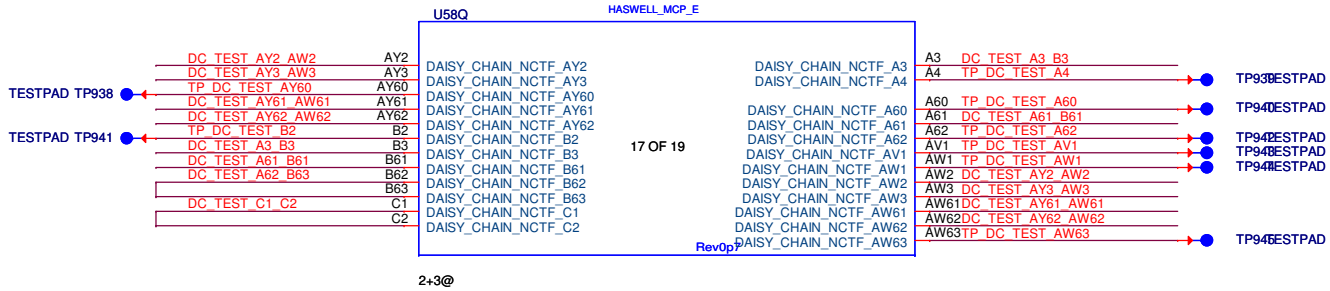

Security Classification	LC Future Center Secret Data		
Issued Date	2012/05/02	Deciphered Date	2012/5/02

THIS SHEET OF ENGINEERING DRAWING IS THE PROPRIETARY PROPERTY OF LC FUTURE CENTER. AND CONTAINS CONFIDENTIAL AND TRADE SECRET INFORMATION. THIS SHEET MAY NOT BE TRANSFERED FROM THE CUSTODY OF THE COMPETENT DIVISION OF R&D DEPARTMENT EXCEPT AS AUTHORIZED BY LC FUTURE CENTER NEITHER THIS SHEET NOR THE INFORMATION IT CONTAINS MAY BE USED BY OR DISCLOSED TO ANY THIRD PARTY WITHOUT PRIOR WRITTEN CONSENT OF LC FUTURE CENTER.

Title: *CPU(15/16) : NCTF*

Size: B | Document Number | Rev: 0.1

Date: Thursday, May 02, 2013 | Sheet 17 of 100

TABLE

CFG4: Display Port Presence
1: Disabled 0: Enabled

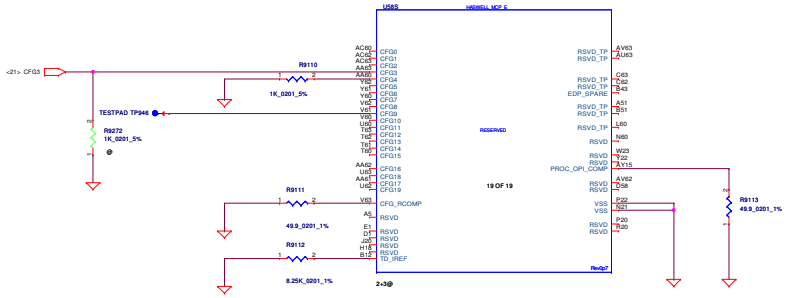

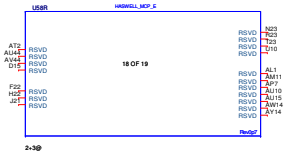

Security Classification	LC Future Center Secret Data			Title
Issued Date	2012/05/02	Deciphered Date	2012/5/02	CPU(16/18) : CFG/RESERVED
Size D	Document Number			Rev 0.1
Date: Monday, May 06, 2013	Sheet 18 of 100			

THIS SHEET OF ENGINEERING DRAWING IS THE PROPRIETARY PROPERTY OF LC FUTURE CENTER, AND CONTAINS CONFIDENTIAL AND TRADE SECRET INFORMATION. THIS SHEET MAY NOT BE TRANSFERED FROM THE CUSTODY OF THE COMPETENT DIVISION OF R&D DEPARTMENT EXCEPT AS AUTHORIZED BY LC FUTURE CENTER NEITHER THIS SHEET NOR THE INFORMATION IT CONTAINS MAY BE USED BY OR DISCLOSED TO ANY THIRD PARTY WITHOUT PRIOR WRITTEN CONSENT OF LC FUTURE CENTER.

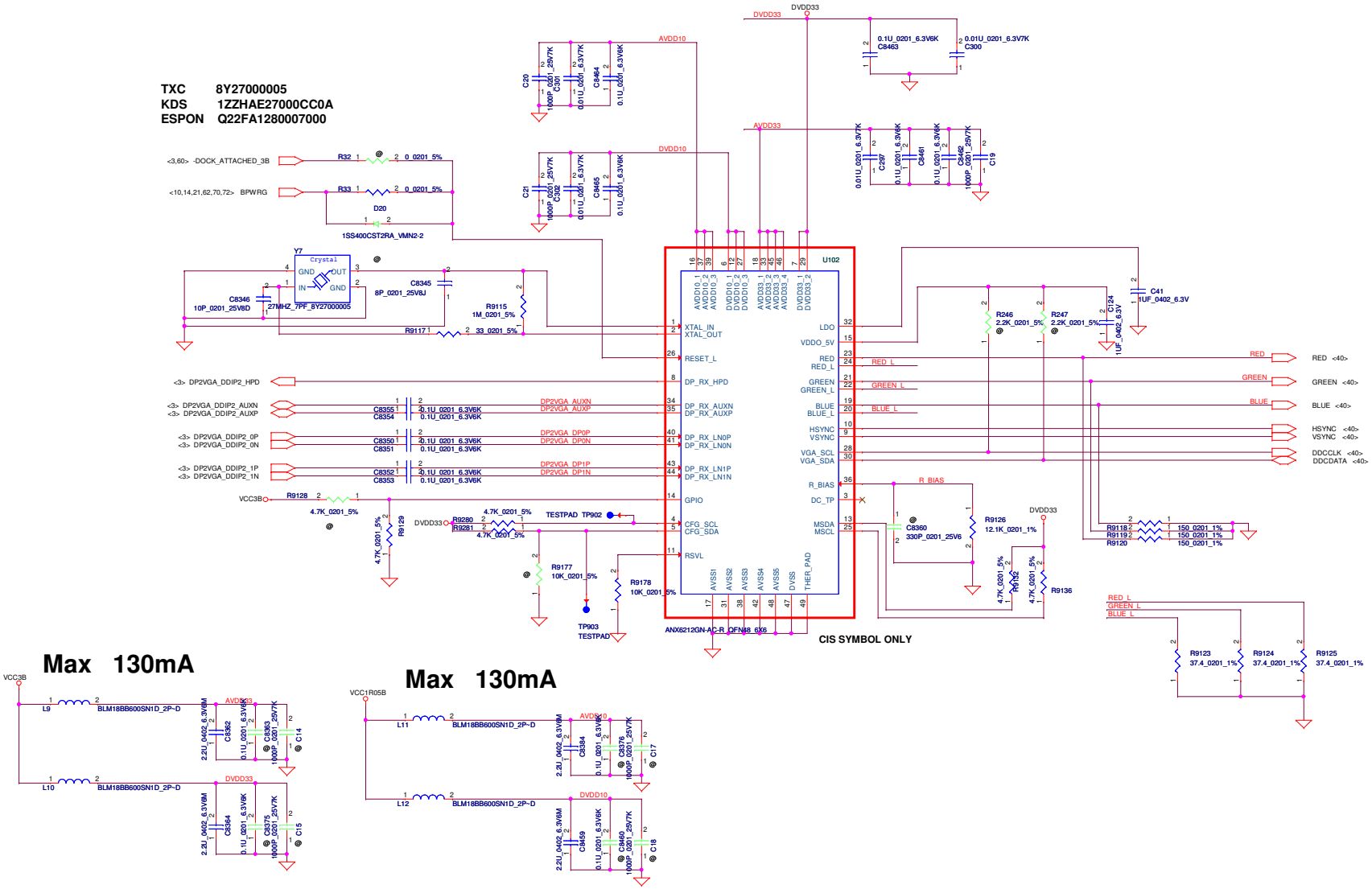

Security Classification	LC Future Center Secret Data		
Issued Date	2012/06/21	Deciphered Date	2012/06/21

THIS SHEET OF ENGINEERING DRAWING IS THE PROPRIETARY PROPERTY OF LC FUTURE CENTER, AND CONTAINS CONFIDENTIAL AND TRADE SECRET INFORMATION. THIS SHEET MAY NOT BE TRANSFERRED FROM THE CUSTODY OF THE COMPETENT DIVISION OF R&D DEPARTMENT EXCEPT AS AUTHORIZED BY LC FUTURE CENTER NEITHER THIS SHEET NOR THE INFORMATION IT CONTAINS MAY BE USED BY OR DISCLOSED TO ANY THIRD PARTY WITHOUT PRIOR WRITTEN CONSENT OF LC FUTURE CENTER.

Title: DDI-VGA CONVERTER
STING UMA

Size: custom | Document Number: RED_L GREEN_L BLUE_L | Rev: 0.1

Date: Thursday, May 02, 2013 | Sheet 19 of 100

BLANK

Security Classification	LC Future Center Secret Data		
Issued Date	2012/05/02	Deciphered Date	2012/5/02

THIS SHEET OF ENGINEERING DRAWING IS THE PROPRIETARY PROPERTY OF LC FUTURE CENTER, AND CONTAINS CONFIDENTIAL AND TRADE SECRET INFORMATION. THIS SHEET MAY NOT BE TRANSFERED FROM THE CUSTODY OF THE COMPETENT DIVISION OF R&D DEPARTMENT EXCEPT AS AUTHORIZED BY LC FUTURE CENTER NEITHER THIS SHEET NOR THE INFORMATION IT CONTAINS MAY BE USED BY OR DISCLOSED TO ANY THIRD PARTY WITHOUT PRIOR WRITTEN CONSENT OF LC FUTURE CENTER.

Title
BLANK

Size: Custom | Document Number | Rev 0.1

Date: Thursday, May 02, 2013 | Sheet 20 of 100

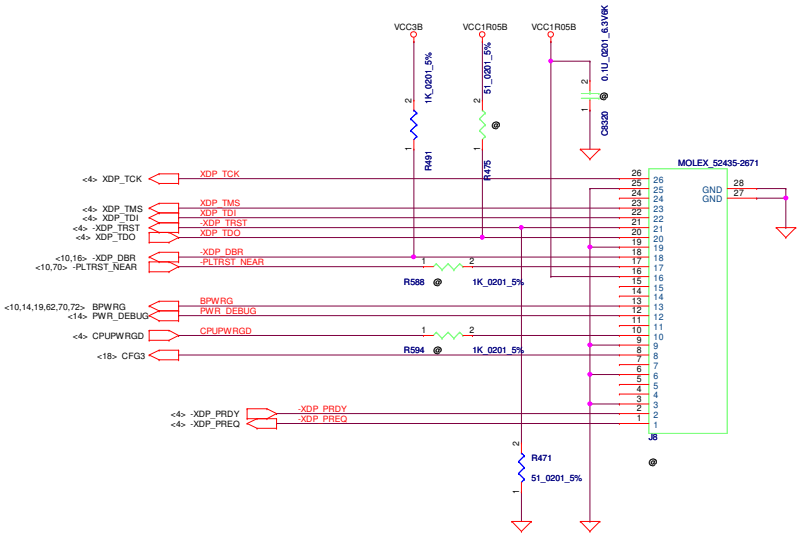

TABLE NOTE: J8 "ASM" FOR PDV/SDV ONLY.

SIGNAL	REF DES	ENABLE	DISABLE
TDO	R475	ASM	NO ASM
TRST#	R471	ASM	ASM
DBRST#	R491	ASM	ASM
RESET#	R588	ASM	NO ASM
PWRGD	R594	ASM	NO ASM
	J8	ASM	NO ASM

LOGIC

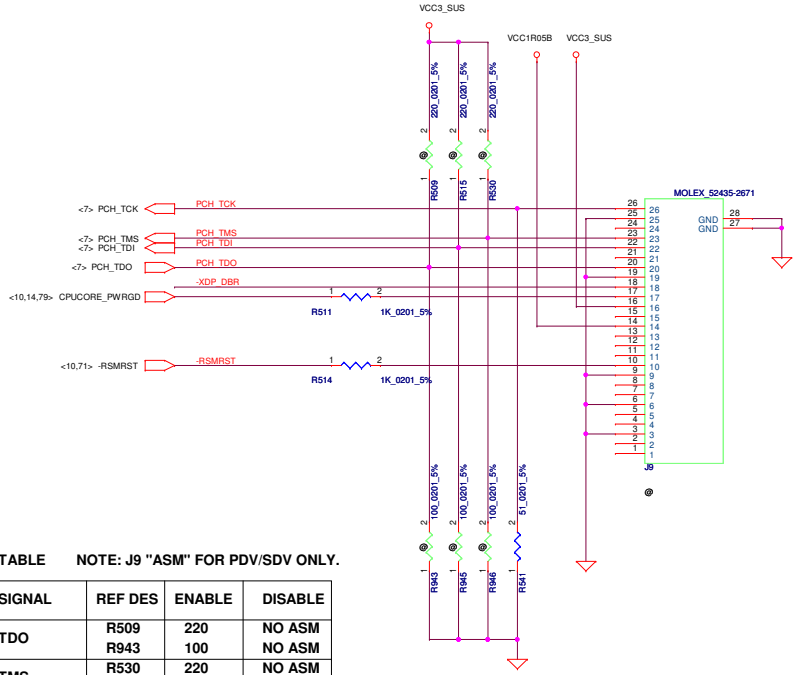

TABLE NOTE: J9 "ASM" FOR PDV/SDV ONLY.

SIGNAL	REF DES	ENABLE	DISABLE
TDO	R509 R943	220 100	NO ASM NO ASM
TMS	R530 R946	220 100	NO ASM NO ASM
TDI	R515 R945	220 100	NO ASM NO ASM
TCK	R541	51	51
CPUCORE_PWRGD	R511	ASM	NO ASM
-RSMRST	R514	ASM	NO ASM
	J9	ASM	NO ASM

LOGIC

Security Classification	LC Future Center Secret Data		
Issued Date	2012/06/21	Deciphered Date	2012/06/21

THIS SHEET OF ENGINEERING DRAWING IS THE PROPRIETARY PROPERTY OF LC FUTURE CENTER, AND CONTAINS CONFIDENTIAL AND TRADE SECRET INFORMATION. THIS SHEET MAY NOT BE TRANSFERED FROM THE CUSTODY OF THE COMPETENT DIVISION OF R&D DEPARTMENT EXCEPT AS AUTHORIZED BY LC FUTURE CENTER NEITHER THIS SHEET NOR THE INFORMATION IT CONTAINS MAY BE USED BY OR DISCLOSED TO ANY THIRD PARTY WITHOUT PRIOR WRITTEN CONSENT OF LC FUTURE CENTER.

Title: XDP CONNECTOR

Size: Custom | Document Number: STING UMA | Rev: 0.1

Date: Thursday, May 02, 2013 | Sheet 21 of 100

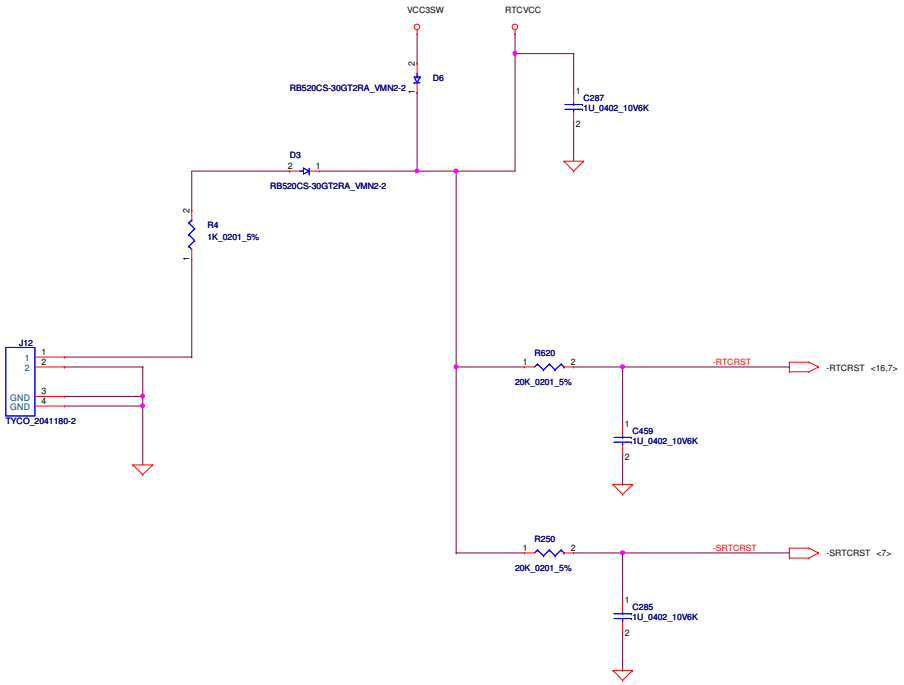

Security Classification	LC Future Center Secret Data			Title
Issued Date	2012/07/01	Deciphered Date	2014/07/01	RTC BATTERY
THIS SHEET OF ENGINEERING DRAWING IS THE PROPRIETARY PROPERTY OF LC FUTURE CENTER, AND CONTAINS CONFIDENTIAL AND TRADE SECRET INFORMATION. THIS SHEET MAY NOT BE TRANSFERED FROM THE CUSTODY OF THE COMPETENT DIVISION OF R&D DEPARTMENT EXCEPT AS AUTHORIZED BY LC FUTURE CENTER NEITHER THIS SHEET NOR THE INFORMATION IT CONTAINS MAY BE USED BY OR DISCLOSED TO ANY THIRD PARTY WITHOUT PRIOR WRITTEN CONSENT OF LC FUTURE CENTER.				Size: Custom; Document Number; Rev 0.1
				Date: Thursday, May 02, 2013; Sheet 22 of 100

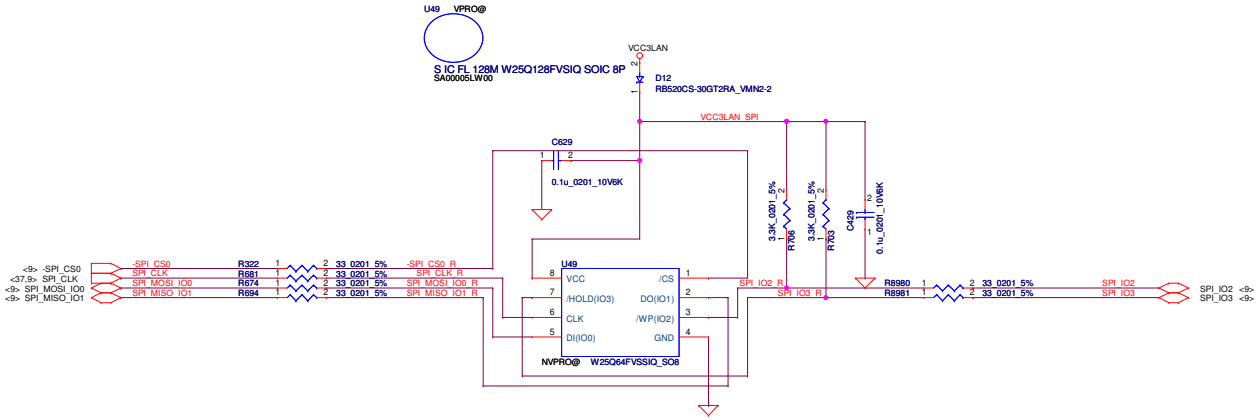

TABLE

SF100 PIN HEADER INTERFACE (TOP VIEW)					
1	VCC	D12.1	GND	GND	2
3	CS#	R322.2	R681.2	CLK	4
5	MISO	R694.2	R674.2	MOSI	6
7	(KEY)	N/A	N/A	(RESET)	8

U49 SPI ROM

vPRO model(16MB)	Non-vPRO model(8MB)
WINBOND W25Q128FVSIQ MACRONIX MX25L12875FM2I-10G MICRON N25Q128A13ESEC0F	WINBOND W25Q64FVSSIQ MACRONIX MX25L6475EM2I-10G MICRON N25Q064A13ESEC0F

Security Classification	LC Future Center Secret Data		
Issued Date	2012/07/01	Deciphered Date	2014/07/01

THIS SHEET OF ENGINEERING DRAWING IS THE PROPRIETARY PROPERTY OF LC FUTURE CENTER, AND CONTAINS CONFIDENTIAL AND TRADE SECRET INFORMATION. THIS SHEET MAY NOT BE TRANSFERED FROM THE CUSTODY OF THE COMPETENT DIVISION OF R&D DEPARTMENT EXCEPT AS AUTHORIZED BY LC FUTURE CENTER NEITHER THIS SHEET NOR THE INFORMATION IT CONTAINS MAY BE USED BY OR DISCLOSED TO ANY THIRD PARTY WITHOUT PRIOR WRITTEN CONSENT OF LC FUTURE CENTER.

Title: *SPI FLASH*

Size: Custom | Document Number | Rev: 0.1

Date: Thursday, May 02, 2013 | Sheet 23 of 100

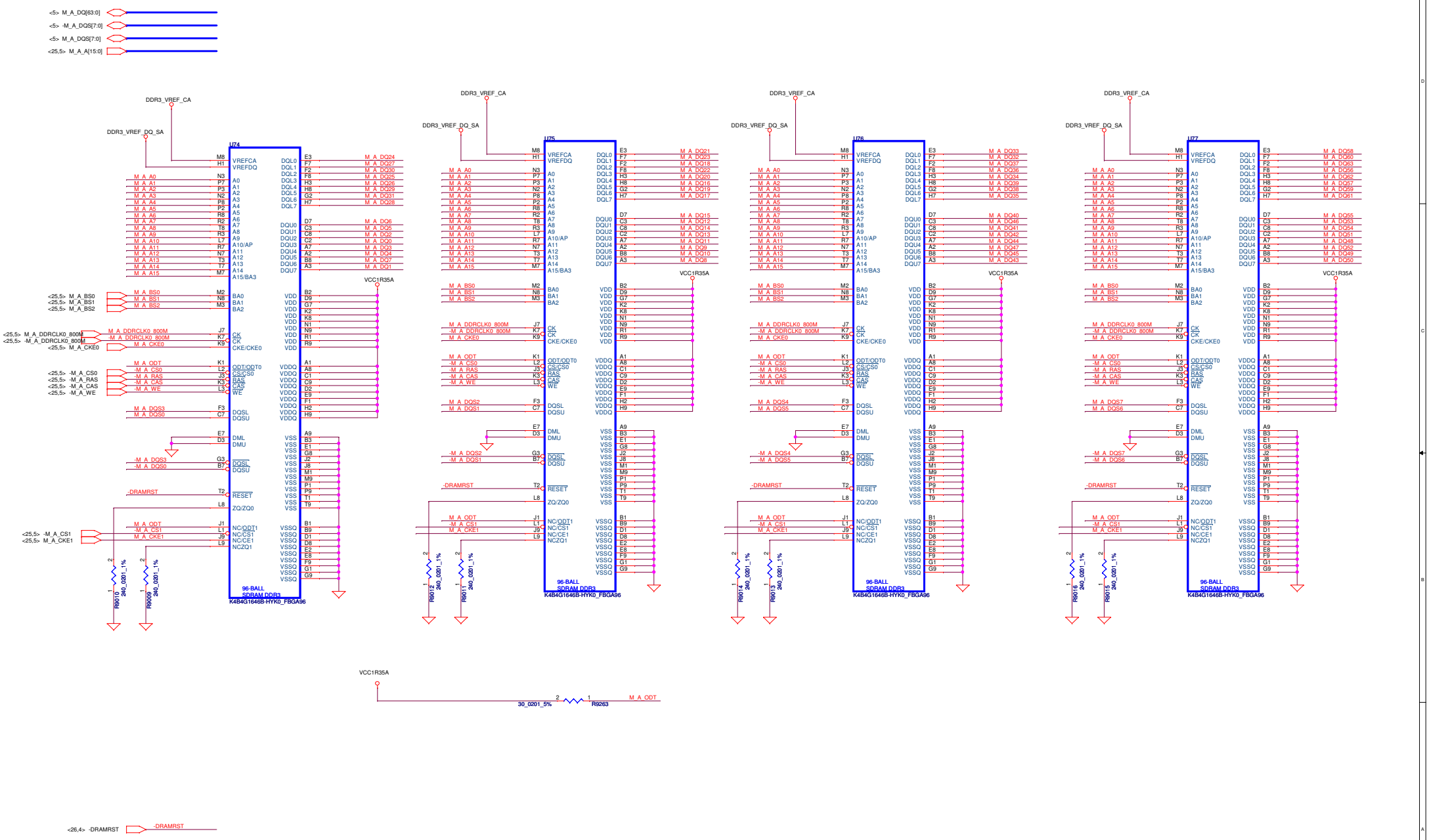

Security Classification	LC Future Center Secret Data		
Issued Date	2012/06/21	Deciphered Date	2012/06/21

THIS SHEET OF ENGINEERING DRAWING IS THE PROPRIETARY PROPERTY OF LC FUTURE CENTER. AND CONTAINS CONFIDENTIAL AND TRADE SECRET INFORMATION. THIS SHEET MAY NOT BE TRANSFERRED FROM THE CUSTODY OF THE COMPETENT DIVISION OF R&D DEPARTMENT EXCEPT AS AUTHORIZED BY LC FUTURE CENTER NEITHER THIS SHEET NOR THE INFORMATION IT CONTAINS MAY BE USED BY OR DISCLOSED TO ANY THIRD PARTY WITHOUT PRIOR WRITTEN CONSENT OF LC FUTURE CENTER.

Title: DDR3L BASE MEMORY CH-A (1/2)

STING UMA

LCFC

Size	Document Number	Rev
custom		0.1

Date: Thursday, May 02, 2013 | Sheet 24 of 100

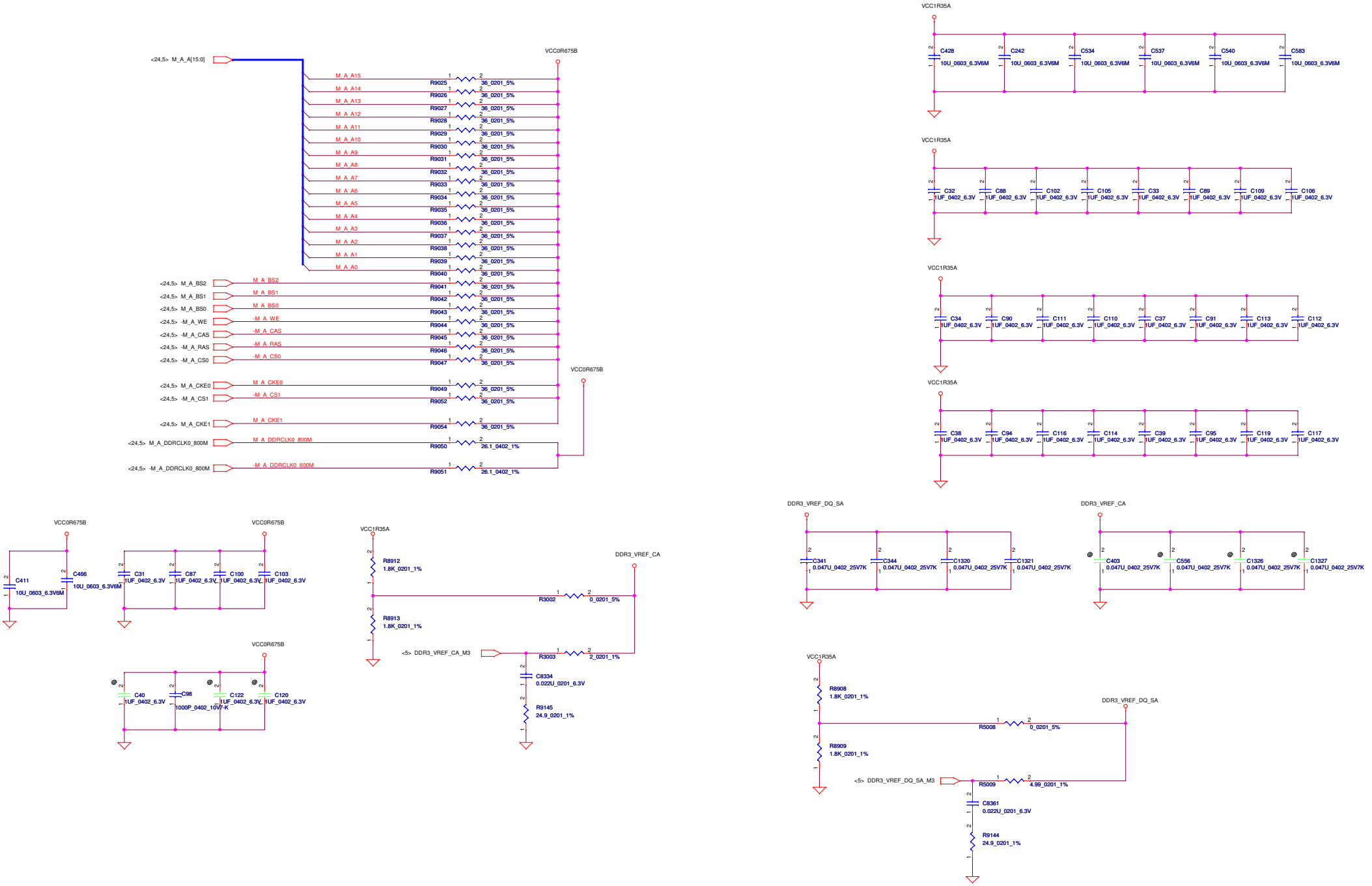

Security Classification	LC Future Center Secret Data		
Issued Date	2012/06/21	Deciphered Date	2012/06/21

THIS SHEET OF ENGINEERING DRAWING IS THE PROPRIETARY PROPERTY OF LC FUTURE CENTER. AND CONTAINS CONFIDENTIAL AND TRADE SECRET INFORMATION. THIS SHEET MAY NOT BE TRANSFERRED FROM THE CUSTODY OF THE COMPETENT DIVISION OF R&D DEPARTMENT EXCEPT AS AUTHORIZED BY LC FUTURE CENTER NEITHER THIS SHEET NOR THE INFORMATION IT CONTAINS MAY BE USED BY OR DISCLOSED TO ANY THIRD PARTY WITHOUT PRIOR WRITTEN CONSENT OF LC FUTURE CENTER.

Title: DDR3L BASE MEMORY CH-A (2/2)
STING UMA

Size: Custom | Document Number | Rev 0.1

Date: Thursday, May 02, 2013 | Sheet 25 of 100

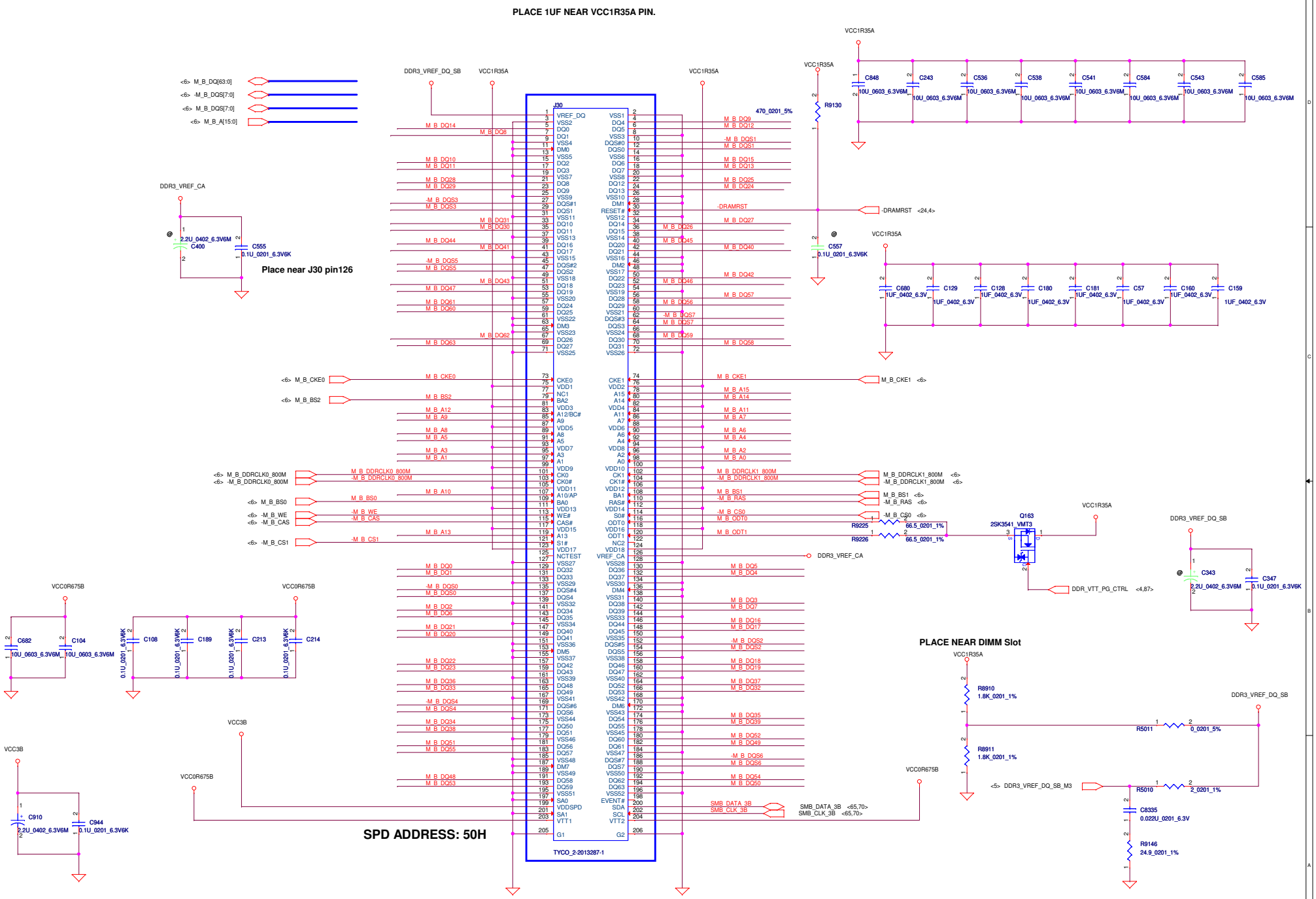

Security Classification	LC Future Center Secret Data		
Issued Date	2012/06/21	Deciphered Date	2012/06/21

THIS SHEET OF ENGINEERING DRAWING IS THE PROPRIETARY PROPERTY OF LC FUTURE CENTER. AND CONTAINS CONFIDENTIAL AND TRADE SECRET INFORMATION. THIS SHEET MAY NOT BE TRANSFERED FROM THE CUSTODY OF THE COMPETENT DIVISION OF R&D DEPARTMENT EXCEPT AS AUTHORIZED BY LC FUTURE CENTER NEITHER THIS SHEET NOR THE INFORMATION IT CONTAINS MAY BE USED BY OR DISCLOSED TO ANY THIRD PARTY WITHOUT PRIOR WRITTEN CONSENT OF LC FUTURE CENTER.

Title: DDR3L SO DIMM CHANNEL-B

STING UMA

Size	Document Number	Rev
C		0.1

Date: Thursday, May 02, 2013 | Sheet 26 of 100

ST-1_SWG_SDV_EC173

BLANK

Security Classification	LC Future Center Secret Data		
Issued Date	2012/06/21	Deciphered Date	2012/06/21

THIS SHEET OF ENGINEERING DRAWING IS THE PROPRIETARY PROPERTY OF LC FUTURE CENTER, AND CONTAINS CONFIDENTIAL AND TRADE SECRET INFORMATION. THIS SHEET MAY NOT BE TRANSFERED FROM THE CUSTODY OF THE COMPETENT DIVISION OF R&D DEPARTMENT EXCEPT AS AUTHORIZED BY LC FUTURE CENTER NEITHER THIS SHEET NOR THE INFORMATION IT CONTAINS MAY BE USED BY OR DISCLOSED TO ANY THIRD PARTY WITHOUT PRIOR WRITTEN CONSENT OF LC FUTURE CENTER.

Title
BLANK

STING UMA

Size: Custom	Document Number	Rev 0.1
Date: Thursday, May 02, 2013	Sheet 27 of 100	

BLANK

Security Classification	LC Future Center Secret Data		
Issued Date	2012/06/21	Deciphered Date	2012/06/21

THIS SHEET OF ENGINEERING DRAWING IS THE PROPRIETARY PROPERTY OF LC FUTURE CENTER, AND CONTAINS CONFIDENTIAL AND TRADE SECRET INFORMATION. THIS SHEET MAY NOT BE TRANSFERED FROM THE CUSTODY OF THE COMPETENT DIVISION OF R&D DEPARTMENT EXCEPT AS AUTHORIZED BY LC FUTURE CENTER NEITHER THIS SHEET NOR THE INFORMATION IT CONTAINS MAY BE USED BY OR DISCLOSED TO ANY THIRD PARTY WITHOUT PRIOR WRITTEN CONSENT OF LC FUTURE CENTER.

Title
BLANK
STING UMA

Size: Custom
Document Number
Rev 0.1

Date: Thursday, May 02, 2013
Sheet 28 of 100

BLANK

Security Classification	LC Future Center Secret Data		
Issued Date	2012/05/02	Deciphered Date	2012/5/02

THIS SHEET OF ENGINEERING DRAWING IS THE PROPRIETARY PROPERTY OF LC FUTURE CENTER, AND CONTAINS CONFIDENTIAL AND TRADE SECRET INFORMATION. THIS SHEET MAY NOT BE TRANSFERED FROM THE CUSTODY OF THE COMPETENT DIVISION OF R&D DEPARTMENT EXCEPT AS AUTHORIZED BY LC FUTURE CENTER NEITHER THIS SHEET NOR THE INFORMATION IT CONTAINS MAY BE USED BY OR DISCLOSED TO ANY THIRD PARTY WITHOUT PRIOR WRITTEN CONSENT OF LC FUTURE CENTER.

Title
BLANK

Size	Document Number	Rev
Custom		0.1

Date: Thursday, May 02, 2013 | Sheet 29 of 100

BLANK

Security Classification	LC Future Center Secret Data		
Issued Date	2012/05/02	Deciphered Date	2012/5/02

THIS SHEET OF ENGINEERING DRAWING IS THE PROPRIETARY PROPERTY OF LC FUTURE CENTER, AND CONTAINS CONFIDENTIAL AND TRADE SECRET INFORMATION. THIS SHEET MAY NOT BE TRANSFERED FROM THE CUSTODY OF THE COMPETENT DIVISION OF R&D DEPARTMENT EXCEPT AS AUTHORIZED BY LC FUTURE CENTER NEITHER THIS SHEET NOR THE INFORMATION IT CONTAINS MAY BE USED BY OR DISCLOSED TO ANY THIRD PARTY WITHOUT PRIOR WRITTEN CONSENT OF LC FUTURE CENTER.

Title
BLANK

Size: Custom	Document Number	Rev 0.1
Date: Thursday, May 02, 2013	Sheet 30 of 100	

BLANK

Security Classification	LC Future Center Secret Data		
Issued Date	2012/05/02	Deciphered Date	2012/5/02

THIS SHEET OF ENGINEERING DRAWING IS THE PROPRIETARY PROPERTY OF LC FUTURE CENTER, AND CONTAINS CONFIDENTIAL AND TRADE SECRET INFORMATION. THIS SHEET MAY NOT BE TRANSFERED FROM THE CUSTODY OF THE COMPETENT DIVISION OF R&D DEPARTMENT EXCEPT AS AUTHORIZED BY LC FUTURE CENTER NEITHER THIS SHEET NOR THE INFORMATION IT CONTAINS MAY BE USED BY OR DISCLOSED TO ANY THIRD PARTY WITHOUT PRIOR WRITTEN CONSENT OF LC FUTURE CENTER.

Title
BLANK

Size: Custom | Document Number | Rev 0.1

Date: Thursday, May 02, 2013 | Sheet 31 of 100

BLANK

Security Classification	LC Future Center Secret Data		
Issued Date	2012/05/02	Deciphered Date	2012/5/02

THIS SHEET OF ENGINEERING DRAWING IS THE PROPRIETARY PROPERTY OF LC FUTURE CENTER, AND CONTAINS CONFIDENTIAL AND TRADE SECRET INFORMATION. THIS SHEET MAY NOT BE TRANSFERED FROM THE CUSTODY OF THE COMPETENT DIVISION OF R&D DEPARTMENT EXCEPT AS AUTHORIZED BY LC FUTURE CENTER NEITHER THIS SHEET NOR THE INFORMATION IT CONTAINS MAY BE USED BY OR DISCLOSED TO ANY THIRD PARTY WITHOUT PRIOR WRITTEN CONSENT OF LC FUTURE CENTER.

Title
BLANK

Size: Custom	Document Number	Rev 0.1
Date: Thursday, May 02, 2013	Sheet 32 of 100	

BLANK

Security Classification	LC Future Center Secret Data		
Issued Date	2012/05/02	Deciphered Date	2012/5/02

THIS SHEET OF ENGINEERING DRAWING IS THE PROPRIETARY PROPERTY OF LC FUTURE CENTER, AND CONTAINS CONFIDENTIAL AND TRADE SECRET INFORMATION. THIS SHEET MAY NOT BE TRANSFERED FROM THE CUSTODY OF THE COMPETENT DIVISION OF R&D DEPARTMENT EXCEPT AS AUTHORIZED BY LC FUTURE CENTER NEITHER THIS SHEET NOR THE INFORMATION IT CONTAINS MAY BE USED BY OR DISCLOSED TO ANY THIRD PARTY WITHOUT PRIOR WRITTEN CONSENT OF LC FUTURE CENTER.

Title
BLANK

Size: Custom | Document Number | Rev 0.1

Date: Thursday, May 02, 2013 | Sheet 33 of 100

BLANK

Security Classification	LC Future Center Secret Data		
Issued Date	2012/05/02	Deciphered Date	2012/5/02

THIS SHEET OF ENGINEERING DRAWING IS THE PROPRIETARY PROPERTY OF LC FUTURE CENTER, AND CONTAINS CONFIDENTIAL AND TRADE SECRET INFORMATION. THIS SHEET MAY NOT BE TRANSFERED FROM THE CUSTODY OF THE COMPETENT DIVISION OF R&D DEPARTMENT EXCEPT AS AUTHORIZED BY LC FUTURE CENTER NEITHER THIS SHEET NOR THE INFORMATION IT CONTAINS MAY BE USED BY OR DISCLOSED TO ANY THIRD PARTY WITHOUT PRIOR WRITTEN CONSENT OF LC FUTURE CENTER.

Title
BLANK

Size: Custom	Document Number	Rev 0.1
Date: Thursday, May 02, 2013	Sheet 34 of 100	

BLANK

Security Classification	LC Future Center Secret Data		
Issued Date	2012/05/02	Deciphered Date	2012/5/02

THIS SHEET OF ENGINEERING DRAWING IS THE PROPRIETARY PROPERTY OF LC FUTURE CENTER, AND CONTAINS CONFIDENTIAL AND TRADE SECRET INFORMATION. THIS SHEET MAY NOT BE TRANSFERED FROM THE CUSTODY OF THE COMPETENT DIVISION OF R&D DEPARTMENT EXCEPT AS AUTHORIZED BY LC FUTURE CENTER NEITHER THIS SHEET NOR THE INFORMATION IT CONTAINS MAY BE USED BY OR DISCLOSED TO ANY THIRD PARTY WITHOUT PRIOR WRITTEN CONSENT OF LC FUTURE CENTER.

Title
BLANK

Size	Document Number	Rev
Custom		0.1

Date: Thursday, May 02, 2013 | Sheet 35 of 100

BLANK

Security Classification	LC Future Center Secret Data		
Issued Date	2012/05/02	Deciphered Date	2012/5/02

THIS SHEET OF ENGINEERING DRAWING IS THE PROPRIETARY PROPERTY OF LC FUTURE CENTER, AND CONTAINS CONFIDENTIAL AND TRADE SECRET INFORMATION. THIS SHEET MAY NOT BE TRANSFERED FROM THE CUSTODY OF THE COMPETENT DIVISION OF R&D DEPARTMENT EXCEPT AS AUTHORIZED BY LC FUTURE CENTER NEITHER THIS SHEET NOR THE INFORMATION IT CONTAINS MAY BE USED BY OR DISCLOSED TO ANY THIRD PARTY WITHOUT PRIOR WRITTEN CONSENT OF LC FUTURE CENTER.

Title
BLANK

Size: Custom | Document Number | Rev 0.1

Date: Thursday, May 02, 2013 | Sheet 36 of 100

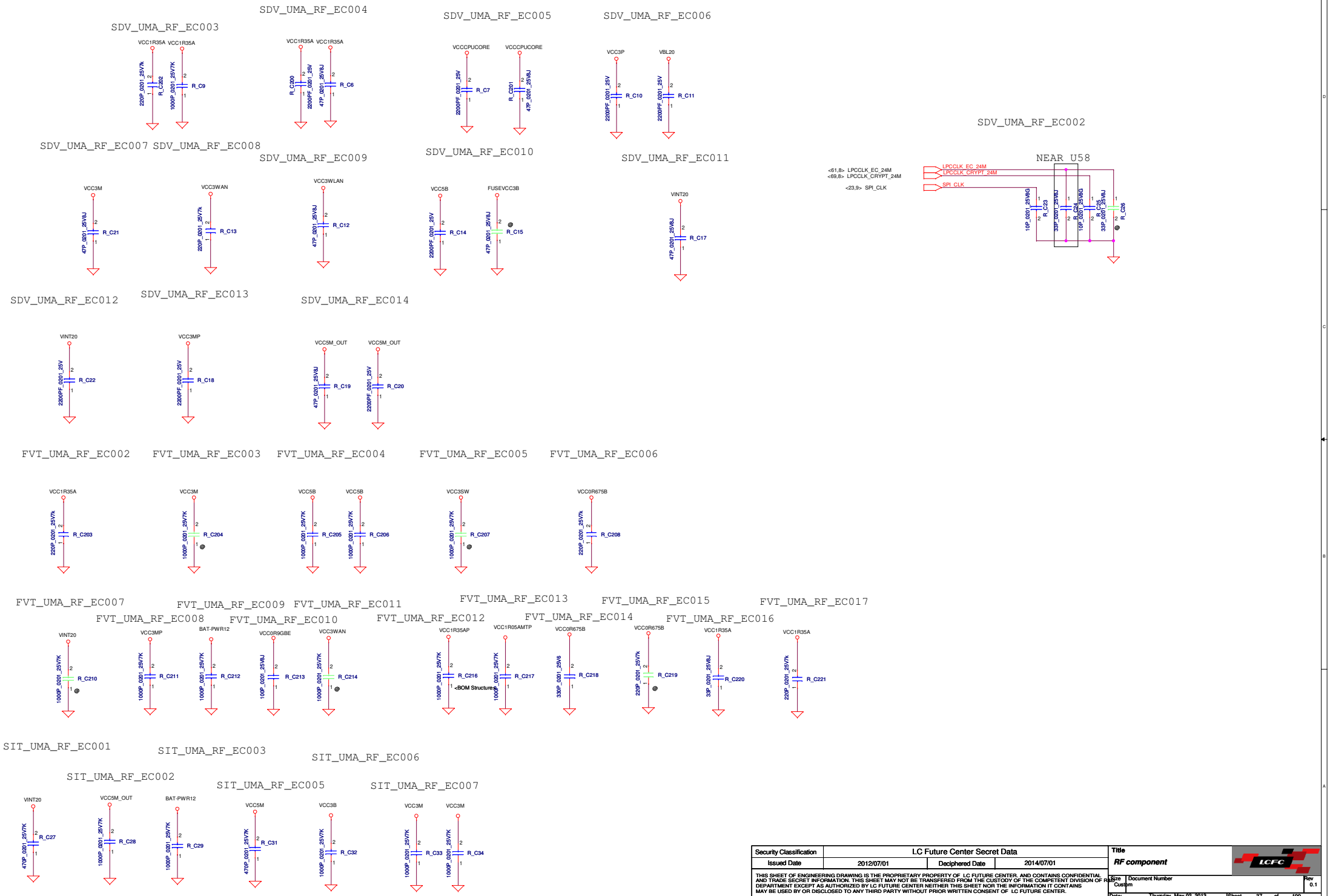

Security Classification	LC Future Center Secret Data		
Issued Date	2012/07/01	Deciphered Date	2014/07/01

THIS SHEET OF ENGINEERING DRAWING IS THE PROPRIETARY PROPERTY OF LC FUTURE CENTER, AND CONTAINS CONFIDENTIAL AND TRADE SECRET INFORMATION. THIS SHEET MAY NOT BE TRANSFERED FROM THE CUSTODY OF THE COMPETENT DIVISION OF R&D DEPARTMENT EXCEPT AS AUTHORIZED BY LC FUTURE CENTER NEITHER THIS SHEET NOR THE INFORMATION IT CONTAINS MAY BE USED BY OR DISCLOSED TO ANY THIRD PARTY WITHOUT PRIOR WRITTEN CONSENT OF LC FUTURE CENTER.

Title: *RF component*

Size: Custom | Document Number | Rev 0.1

Date: Thursday, May 02, 2013 | Sheet 37 of 100

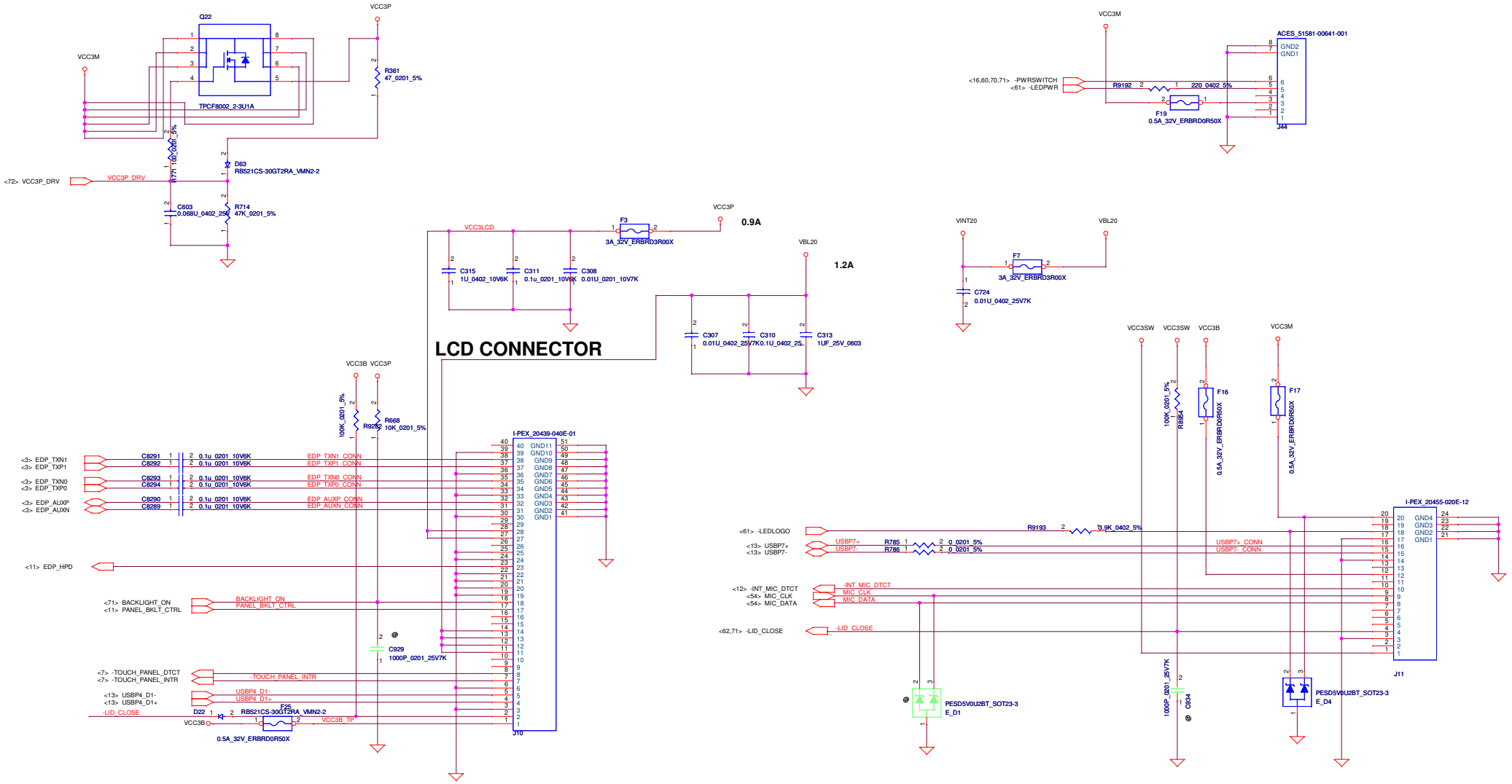

Security Classification	LC Future Center Secret Data		
Issued Date	2012/07/01	Deciphered Date	2014/07/01

THIS SHEET OF ENGINEERING DRAWING IS THE PROPRIETARY PROPERTY OF LC FUTURE CENTER, AND CONTAINS CONFIDENTIAL AND TRADE SECRET INFORMATION. THIS SHEET MAY NOT BE TRANSFERRED FROM THE CUSTODY OF THE COMPETENT DIVISION OF R&D DEPARTMENT EXCEPT AS AUTHORIZED BY LC FUTURE CENTER NEITHER THIS SHEET NOR THE INFORMATION IT CONTAINS MAY BE USED BY OR DISCLOSED TO ANY THIRD PARTY WITHOUT PRIOR WRITTEN CONSENT OF LC FUTURE CENTER.

Title: *LCD CONNECTOR*

Size: Custom | Document Number | Rev: 0.1

Date: Thursday, May 02, 2013 | Sheet 38 of 100

BLANK

Security Classification	LC Future Center Secret Data		
Issued Date	2012/05/02	Deciphered Date	2012/5/02

THIS SHEET OF ENGINEERING DRAWING IS THE PROPRIETARY PROPERTY OF LC FUTURE CENTER, AND CONTAINS CONFIDENTIAL AND TRADE SECRET INFORMATION. THIS SHEET MAY NOT BE TRANSFERED FROM THE CUSTODY OF THE COMPETENT DIVISION OF R&D DEPARTMENT EXCEPT AS AUTHORIZED BY LC FUTURE CENTER NEITHER THIS SHEET NOR THE INFORMATION IT CONTAINS MAY BE USED BY OR DISCLOSED TO ANY THIRD PARTY WITHOUT PRIOR WRITTEN CONSENT OF LC FUTURE CENTER.

Title
BLANK

Size	Document Number	Rev
Custom		0.1

Date: Thursday, May 02, 2013 | Sheet 39 of 100

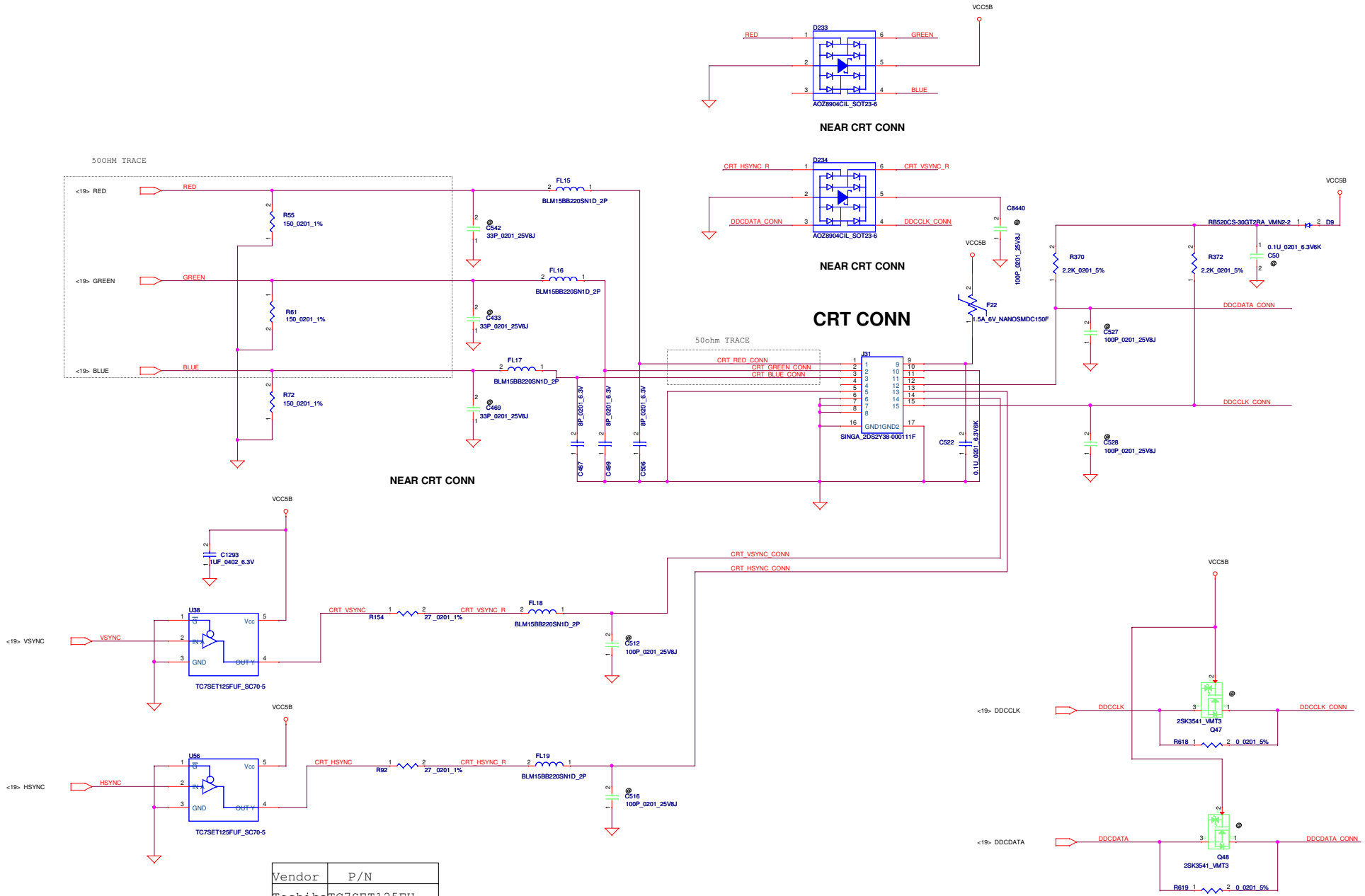

Vendor	P/N
Toshiba	TC7SET125FU
NXP	74AHCT1G125GW

Security Classification	LC Future Center Secret Data		
Issued Date	2012/06/21	Deciphered Date	2012/06/21

THIS SHEET OF ENGINEERING DRAWING IS THE PROPRIETARY PROPERTY OF LC FUTURE CENTER, AND CONTAINS CONFIDENTIAL AND TRADE SECRET INFORMATION. THIS SHEET MAY NOT BE TRANSFERED FROM THE CUSTODY OF THE COMPETENT DIVISION OF R&D DEPARTMENT EXCEPT AS AUTHORIZED BY LC FUTURE CENTER NEITHER THIS SHEET NOR THE INFORMATION IT CONTAINS MAY BE USED BY OR DISCLOSED TO ANY THIRD PARTY WITHOUT PRIOR WRITTEN CONSENT OF LC FUTURE CENTER.

Title: EXT CRT INTERFACE
STING UMA

Size: custom | Document Number | Rev 0.1

Date: Thursday, May 02, 2013 | Sheet 40 of 100

Vendor	P/N
NXP	CBT3257ABQ
On-semi	74FST3257MNTWG

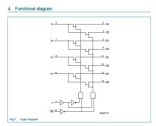

FOR SYSTEM DP NEAR DP CONN

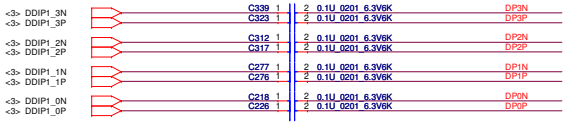

Vendor	P/N
TI	TPS2530
On-semi	NCP380HSN05AAT1G

Security Classification	LC Future Center Secret Data		
Issued Date	2012/06/21	Deciphered Date	2012/06/21

THIS SHEET OF ENGINEERING DRAWING IS THE PROPRIETARY PROPERTY OF LC FUTURE CENTER. AND CONTAINS CONFIDENTIAL AND TRADE SECRET INFORMATION. THIS SHEET MAY NOT BE TRANSFERED FROM THE CUSTODY OF THE COMPETENT DIVISION OF R&D DEPARTMENT EXCEPT AS AUTHORIZED BY LC FUTURE CENTER NEITHER THIS SHEET NOR THE INFORMATION IT CONTAINS MAY BE USED BY OR DISCLOSED TO ANY THIRD PARTY WITHOUT PRIOR WRITTEN CONSENT OF LC FUTURE CENTER.

Title: DISPLAY PORT CONNECTOR
STING UMA

Size: custom | Document Number | Rev 0.1

Date: Thursday, May 02, 2013 | Sheet 41 of 100

BLANK

Security Classification	LC Future Center Secret Data		
Issued Date	2012/05/02	Deciphered Date	2012/5/02

THIS SHEET OF ENGINEERING DRAWING IS THE PROPRIETARY PROPERTY OF LC FUTURE CENTER, AND CONTAINS CONFIDENTIAL AND TRADE SECRET INFORMATION. THIS SHEET MAY NOT BE TRANSFERED FROM THE CUSTODY OF THE COMPETENT DIVISION OF R&D DEPARTMENT EXCEPT AS AUTHORIZED BY LC FUTURE CENTER NEITHER THIS SHEET NOR THE INFORMATION IT CONTAINS MAY BE USED BY OR DISCLOSED TO ANY THIRD PARTY WITHOUT PRIOR WRITTEN CONSENT OF LC FUTURE CENTER.

Title
BLANK

Size	Document Number	Rev
Custom		0.1

Date: Thursday, May 02, 2013 | Sheet 42 of 100

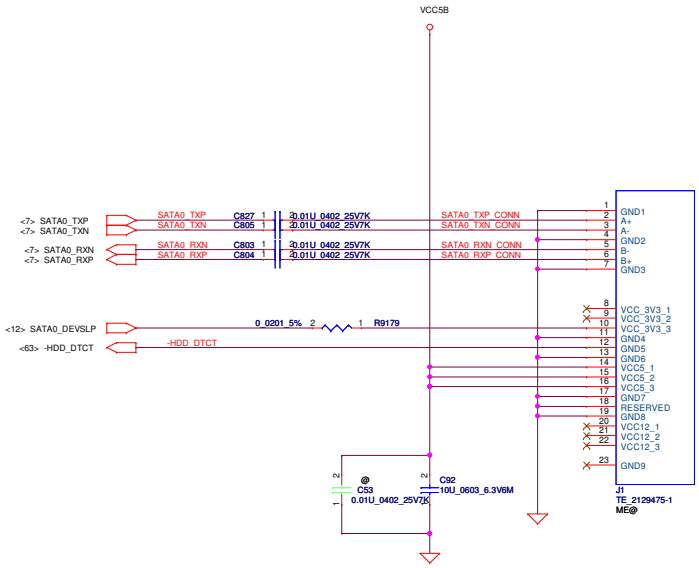

Security Classification	LC Future Center Secret Data		
Issued Date	2012/06/21	Deciphered Date	2012/06/21

THIS SHEET OF ENGINEERING DRAWING IS THE PROPRIETARY PROPERTY OF LC FUTURE CENTER, AND CONTAINS CONFIDENTIAL AND TRADE SECRET INFORMATION. THIS SHEET MAY NOT BE TRANSFERED FROM THE CUSTODY OF THE COMPETENT DIVISION OF R&D DEPARTMENT EXCEPT AS AUTHORIZED BY LC FUTURE CENTER NEITHER THIS SHEET NOR THE INFORMATION IT CONTAINS MAY BE USED BY OR DISCLOSED TO ANY THIRD PARTY WITHOUT PRIOR WRITTEN CONSENT OF LC FUTURE CENTER.

Title
SATA HDD CONN
STING UMA

Size	Document Number	Rev
Custom		0.1

Date: Thursday, May 02, 2013 | Sheet 43 of 100

BLANK

Security Classification	LC Future Center Secret Data		
Issued Date	2012/05/02	Deciphered Date	2012/5/02

THIS SHEET OF ENGINEERING DRAWING IS THE PROPRIETARY PROPERTY OF LC FUTURE CENTER, AND CONTAINS CONFIDENTIAL AND TRADE SECRET INFORMATION. THIS SHEET MAY NOT BE TRANSFERED FROM THE CUSTODY OF THE COMPETENT DIVISION OF R&D DEPARTMENT EXCEPT AS AUTHORIZED BY LC FUTURE CENTER NEITHER THIS SHEET NOR THE INFORMATION IT CONTAINS MAY BE USED BY OR DISCLOSED TO ANY THIRD PARTY WITHOUT PRIOR WRITTEN CONSENT OF LC FUTURE CENTER.

Title
BLANK

Size	Document Number	Rev
Custom		0.1

Date: Thursday, May 02, 2013 | Sheet 44 of 100

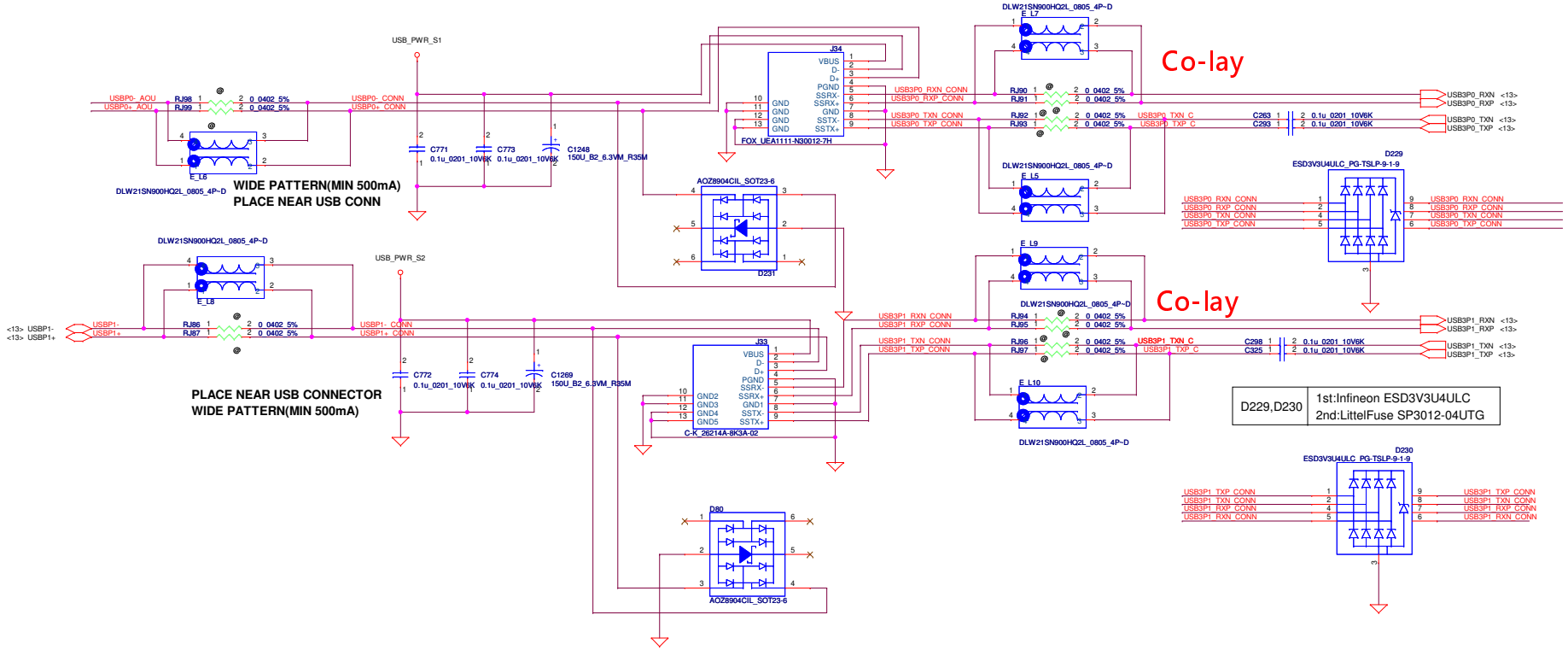

D229,D230	1st:Infineon ESD3V3U4ULC 2nd:LittelFuse SP3012-04UTG

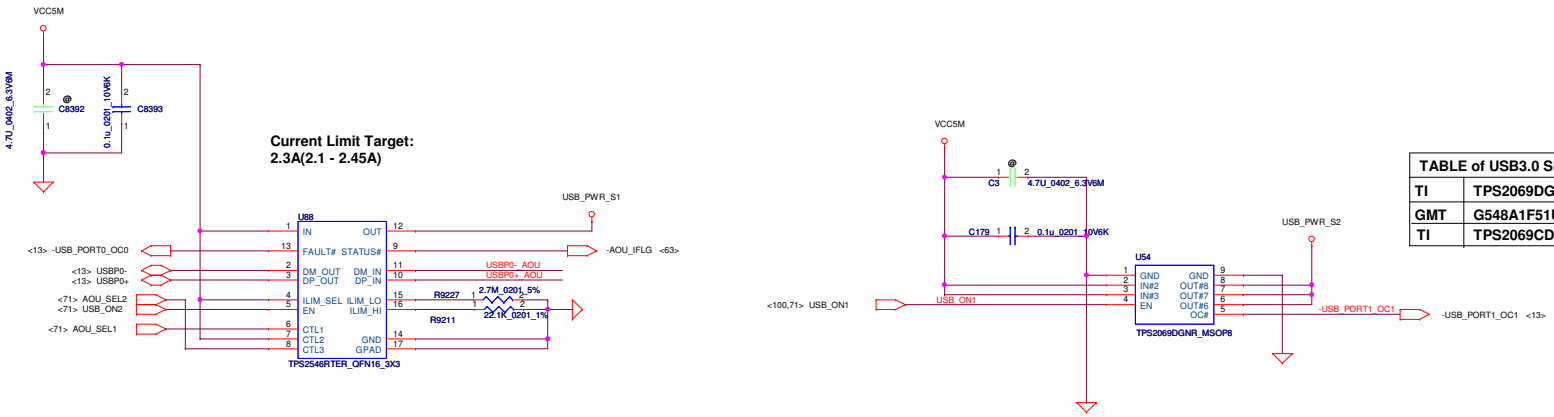

TABLE of USB3.0 Single	
TI	TPS2069DGN
GMT	G548A1F51U
TI	TPS2069CDGNR-2

Vendor	P/N
TI	TPS2546RTER
Pericom	PI5USB2543

Security Classification	LC Future Center Secret Data		
Issued Date	2012/07/01	Deciphered Date	2014/07/01

THIS SHEET OF ENGINEERING DRAWING IS THE PROPRIETARY PROPERTY OF LC FUTURE CENTER. AND CONTAINS CONFIDENTIAL AND TRADE SECRET INFORMATION. THIS SHEET MAY NOT BE TRANSFERED FROM THE CUSTODY OF THE COMPETENT DIVISION OF R&D DEPARTMENT EXCEPT AS AUTHORIZED BY LC FUTURE CENTER NEITHER THIS SHEET NOR THE INFORMATION IT CONTAINS MAY BE USED BY OR DISCLOSED TO ANY THIRD PARTY WITHOUT PRIOR WRITTEN CONSENT OF LC FUTURE CENTER.

Title: USB POWER/CONN

LCFC

Size: Custom | Document Number | Rev 0.1

Date: Thursday, May 02, 2013 | Sheet 45 of 100

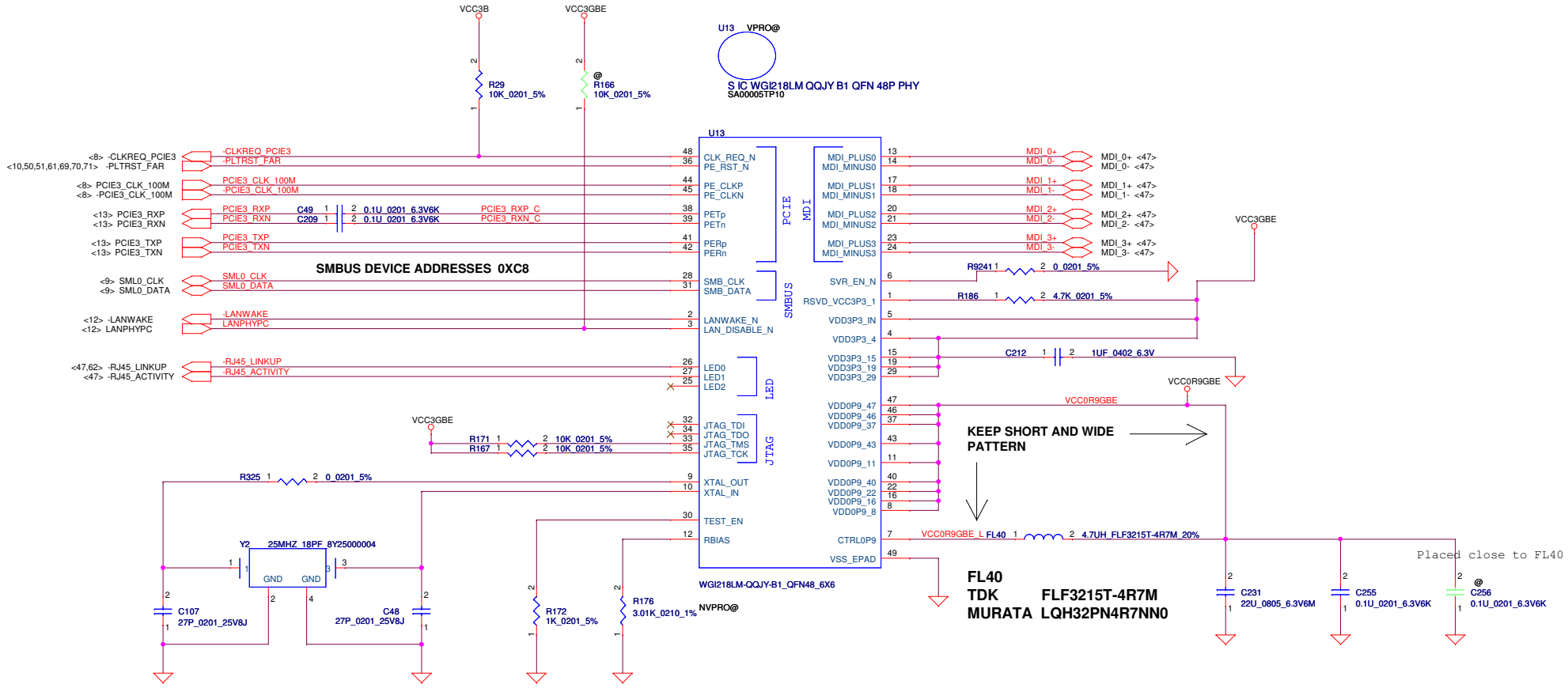

TXC 8Y25000004
KDS 1ZZHAE25000CC0A
ESPON Q22FA1280023800

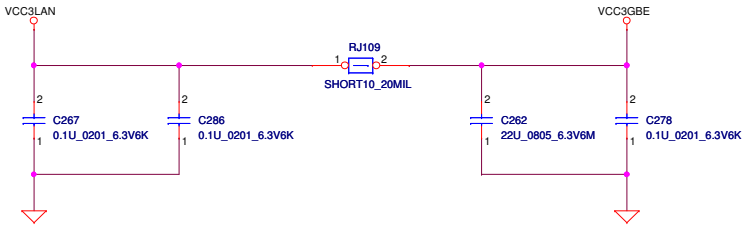

U13 GBE PHY

vPRO Model	Non-vPRO Model
I218LM	I218V

Security Classification	LC Future Center Secret Data		
Issued Date	2012/05/01	Deciphered Date	2012/12/01

THIS SHEET OF ENGINEERING DRAWING IS THE PROPRIETARY PROPERTY OF LC FUTURE CENTER. AND CONTAINS CONFIDENTIAL AND TRADE SECRET INFORMATION. THIS SHEET MAY NOT BE TRANSFERED FROM THE CUSTODY OF THE COMPETENT DIVISION OF R&D DEPARTMENT EXCEPT AS AUTHORIZED BY LC FUTURE CENTER NEITHER THIS SHEET NOR THE INFORMATION IT CONTAINS MAY BE USED BY OR DISCLOSED TO ANY THIRD PARTY WITHOUT PRIOR WRITTEN CONSENT OF LC FUTURE CENTER.

Title: **GBE CLARKVILLE**

Size: Custom | Document Number: STING UMA | Rev: 0.1

Date: Thursday, May 02, 2013 | Sheet 46 of 100

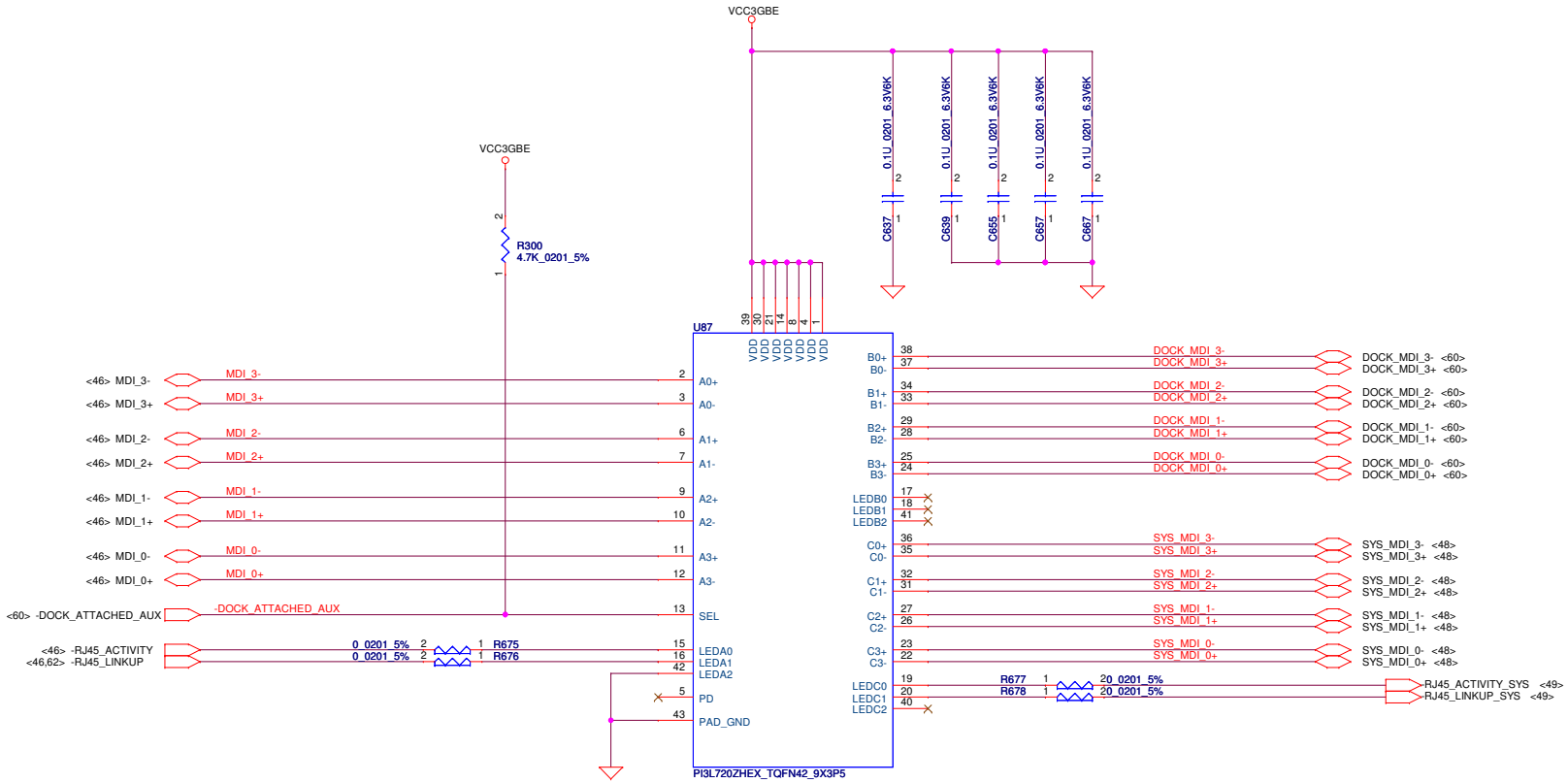

U87

Vendor	P/N
Pericom ST micro Onsemi	PI3L720ZHE STMUX1800E NCN7201

Security Classification	LC Future Center Secret Data		
Issued Date	2012/05/01	Deciphered Date	2012/12/01

THIS SHEET OF ENGINEERING DRAWING IS THE PROPRIETARY PROPERTY OF LC FUTURE CENTER. AND CONTAINS CONFIDENTIAL AND TRADE SECRET INFORMATION. THIS SHEET MAY NOT BE TRANSFERED FROM THE CUSTODY OF THE COMPETENT DIVISION OF R&D DEPARTMENT EXCEPT AS AUTHORIZED BY LC FUTURE CENTER NEITHER THIS SHEET NOR THE INFORMATION IT CONTAINS MAY BE USED BY OR DISCLOSED TO ANY THIRD PARTY WITHOUT PRIOR WRITTEN CONSENT OF LC FUTURE CENTER.

Title: GBE LAN SWITCH

Size: Custom | Document Number: STING UMA | Rev: 0.1

Date: Thursday, May 02, 2013 | Sheet 47 of 100

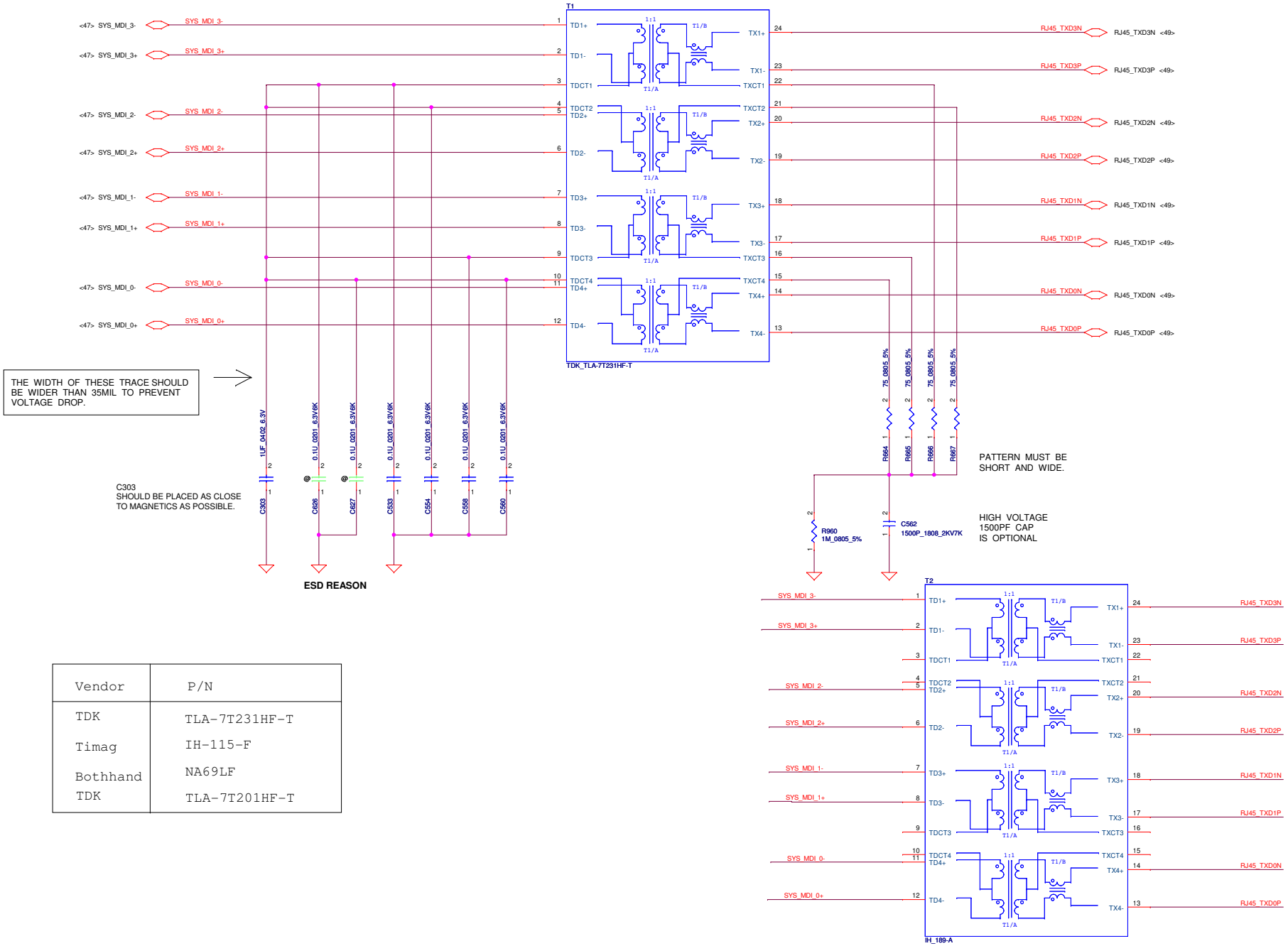

Vendor	P/N
TDK	TLA-7T231HF-T
Timag	IH-115-F
Bothhand	NA69LF
TDK	TLA-7T201HF-T

Security Classification	LC Future Center Secret Data		
Issued Date	2012/05/01	Deciphered Date	2012/12/01

THIS SHEET OF ENGINEERING DRAWING IS THE PROPRIETARY PROPERTY OF LC FUTURE CENTER. AND CONTAINS CONFIDENTIAL AND TRADE SECRET INFORMATION. THIS SHEET MAY NOT BE TRANSFERED FROM THE CUSTODY OF THE COMPETENT DIVISION OF R&D DEPARTMENT EXCEPT AS AUTHORIZED BY LC FUTURE CENTER NEITHER THIS SHEET NOR THE INFORMATION IT CONTAINS MAY BE USED BY OR DISCLOSED TO ANY THIRD PARTY WITHOUT PRIOR WRITTEN CONSENT OF LC FUTURE CENTER.

Title: GBE MAGNETICS

Size: Custom | Document Number: STING UMA | Rev: 0.1

Date: Thursday, May 02, 2013 | Sheet 48 of 100

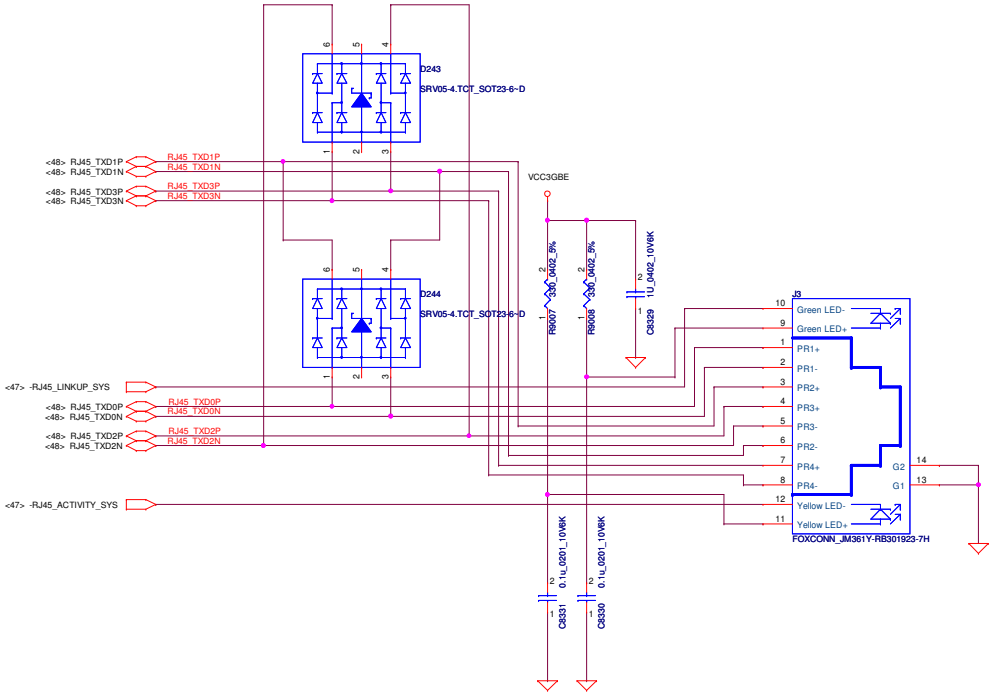

Security Classification	LC Future Center Secret Data		
Issued Date	2012/05/02	Deciphered Date	2012/5/02

THIS SHEET OF ENGINEERING DRAWING IS THE PROPRIETARY PROPERTY OF LC FUTURE CENTER, AND CONTAINS CONFIDENTIAL AND TRADE SECRET INFORMATION. THIS SHEET MAY NOT BE TRANSFERED FROM THE CUSTODY OF THE COMPETENT DIVISION OF R&D DEPARTMENT EXCEPT AS AUTHORIZED BY LC FUTURE CENTER NEITHER THIS SHEET NOR THE INFORMATION IT CONTAINS MAY BE USED BY OR DISCLOSED TO ANY THIRD PARTY WITHOUT PRIOR WRITTEN CONSENT OF LC FUTURE CENTER.

Title
RJ45 CONNECTOR

Size: Custom | Document Number: STING UMA | Rev: 0.1

Date: Thursday, May 02, 2013 | Sheet 49 of 100

TYPE-B NGFF CCARD FOR WWAN/SSD

3.2H CONNECTOR

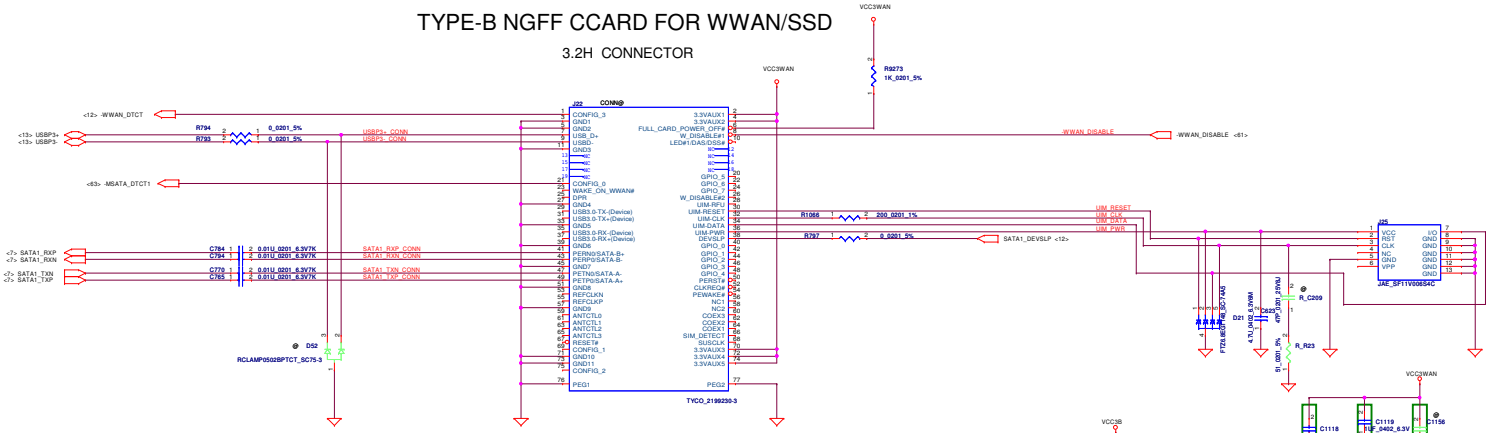

TYPE-A NGFF CCARD FOR WLAN

3.2H CONNECTOR

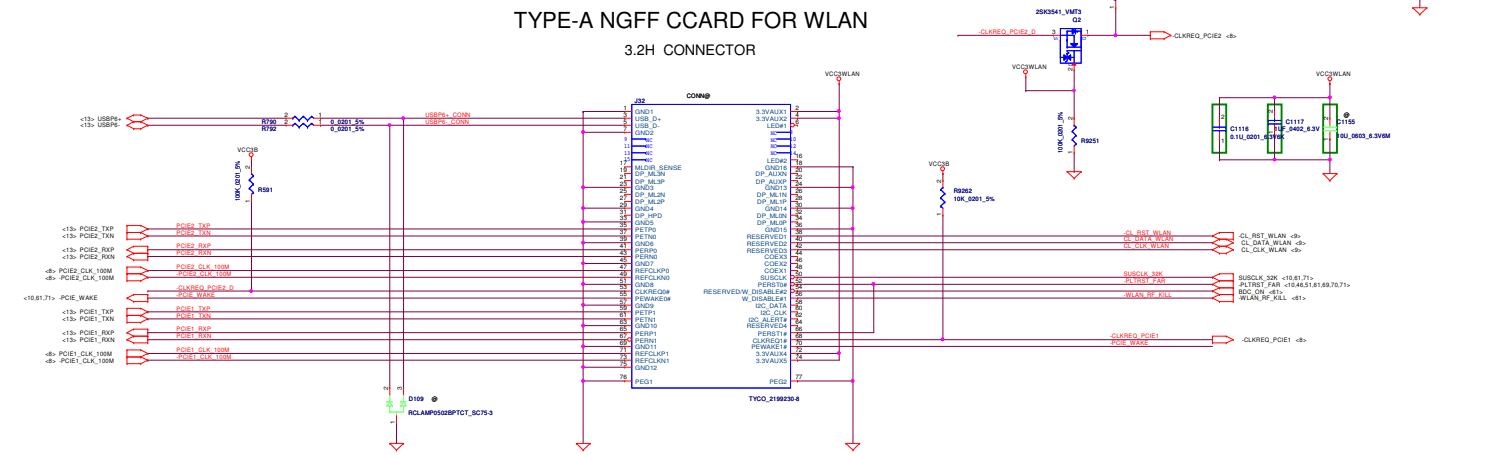

Security Classification	LC Future Center Secret Data		Title
Issued Date	2012/05/02	Deciphered Date 2012/5/02	PCIE MINI CARD SLOT

THIS SHEET OF ENGINEERING DRAWING IS THE PROPRIETARY PROPERTY OF LC FUTURE CENTER, AND CONTAINS CONFIDENTIAL AND TRADE SECRET INFORMATION. THIS SHEET MAY NOT BE TRANSFERED FROM THE CUSTODY OF THE COMPETENT DIVISION OF R&D DEPARTMENT EXCEPT AS AUTHORIZED BY LC FUTURE CENTER NEITHER THIS SHEET NOR THE INFORMATION IT CONTAINS MAY BE USED BY OR DISCLOSED TO ANY THIRD PARTY WITHOUT PRIOR WRITTEN CONSENT OF LC FUTURE CENTER.

Size D | Document Number STING DMA | Rev 0.1

Date: Friday, May 04, 2012 | Sheet 50 of 100

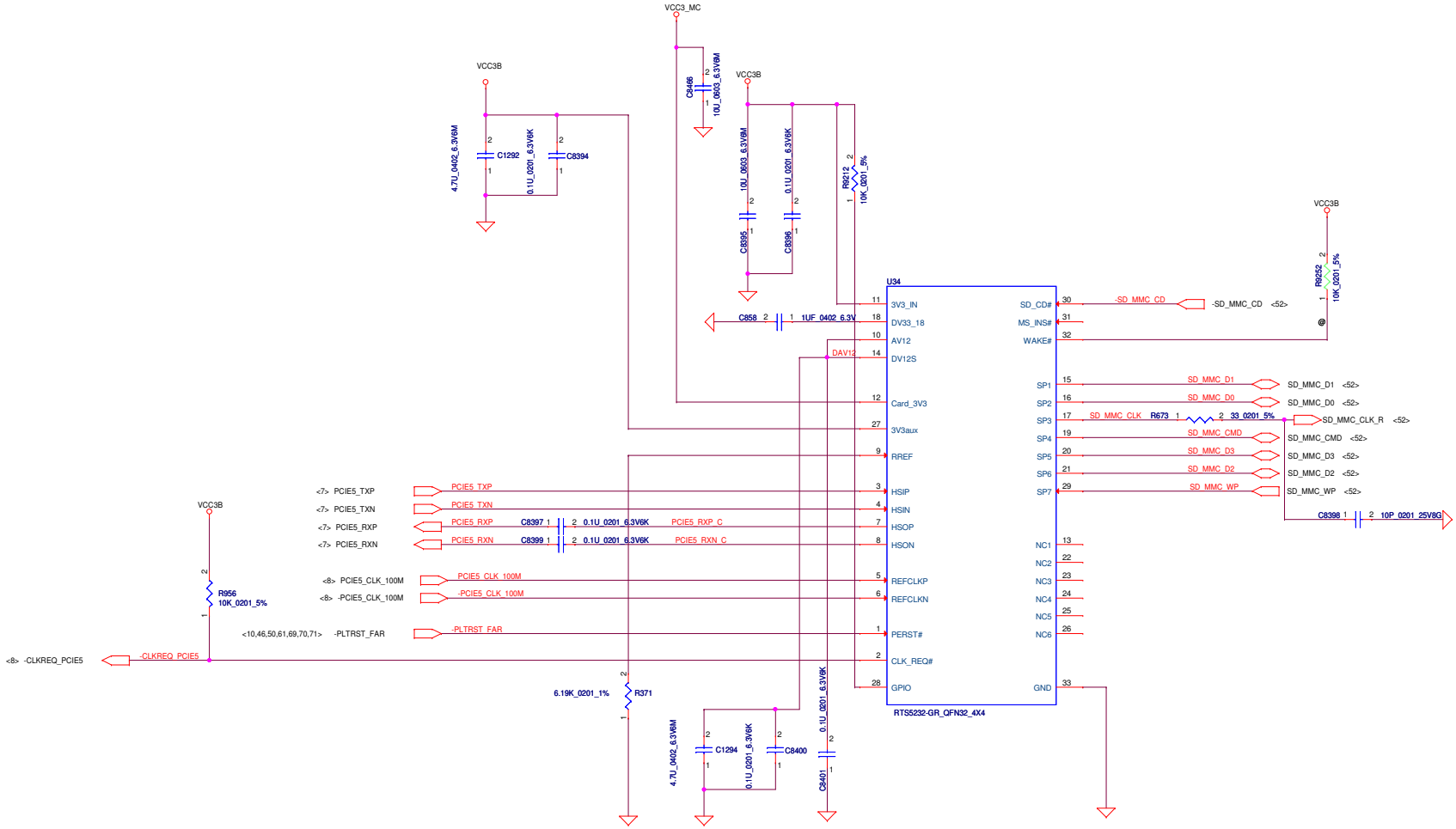

Security Classification	LC Future Center Secret Data		
Issued Date	2012/05/01	Deciphered Date	2012/12/01

THIS SHEET OF ENGINEERING DRAWING IS THE PROPRIETARY PROPERTY OF LC FUTURE CENTER. AND CONTAINS CONFIDENTIAL AND TRADE SECRET INFORMATION. THIS SHEET MAY NOT BE TRANSFERED FROM THE CUSTODY OF THE COMPETENT DIVISION OF R&D DEPARTMENT EXCEPT AS AUTHORIZED BY LC FUTURE CENTER NEITHER THIS SHEET NOR THE INFORMATION IT CONTAINS MAY BE USED BY OR DISCLOSED TO ANY THIRD PARTY WITHOUT PRIOR WRITTEN CONSENT OF LC FUTURE CENTER.

Title

MEDIA CARD CONTROLLER

Size	Document Number	Rev
C	STING UMA	0.1

Date: Thursday, May 02, 2013 Sheet 51 of 100

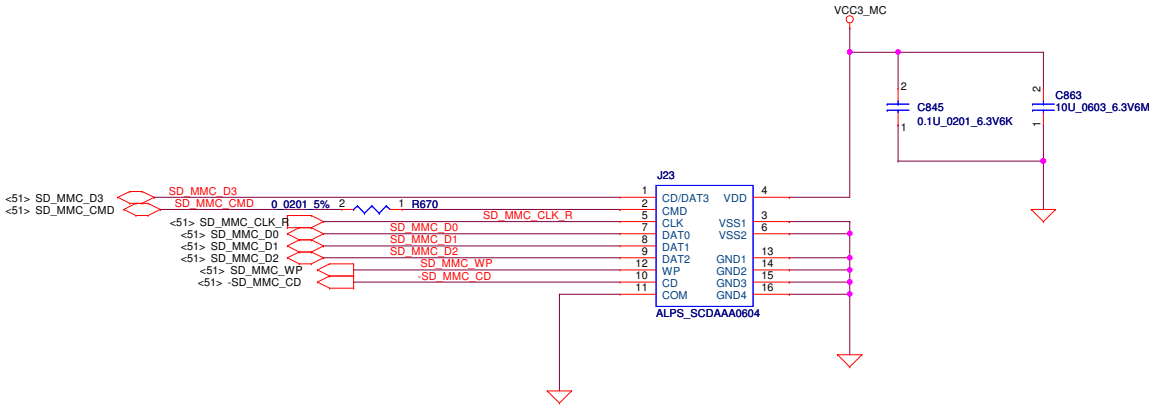

Security Classification	LC Future Center Secret Data		
Issued Date	2012/05/01	Deciphered Date	2012/12/01

THIS SHEET OF ENGINEERING DRAWING IS THE PROPRIETARY PROPERTY OF LC FUTURE CENTER. AND CONTAINS CONFIDENTIAL AND TRADE SECRET INFORMATION. THIS SHEET MAY NOT BE TRANSFERED FROM THE CUSTODY OF THE COMPETENT DIVISION OF R&D DEPARTMENT EXCEPT AS AUTHORIZED BY LC FUTURE CENTER NEITHER THIS SHEET NOR THE INFORMATION IT CONTAINS MAY BE USED BY OR DISCLOSED TO ANY THIRD PARTY WITHOUT PRIOR WRITTEN CONSENT OF LC FUTURE CENTER.

Title: **MEDIA CARD INTERFACE**

Size: Custom | Document Number: STING UMA | Rev: 0.1

Date: Thursday, May 02, 2013 | Sheet 52 of 100

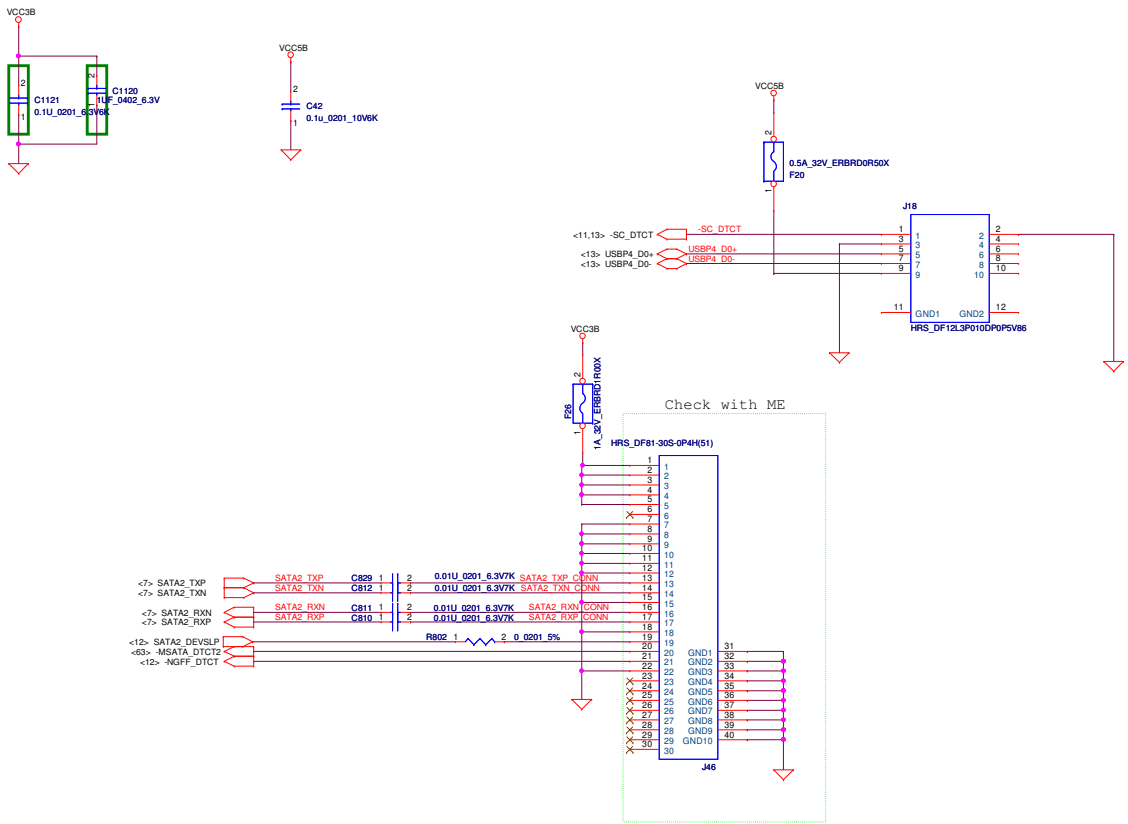

Security Classification	LC Future Center Secret Data		
Issued Date	2012/07/01	Deciphered Date	2014/07/01

THIS SHEET OF ENGINEERING DRAWING IS THE PROPRIETARY PROPERTY OF LC FUTURE CENTER, AND CONTAINS CONFIDENTIAL AND TRADE SECRET INFORMATION. THIS SHEET MAY NOT BE TRANSFERED FROM THE CUSTODY OF THE COMPETENT DIVISION OF R&D DEPARTMENT EXCEPT AS AUTHORIZED BY LC FUTURE CENTER NEITHER THIS SHEET NOR THE INFORMATION IT CONTAINS MAY BE USED BY OR DISCLOSED TO ANY THIRD PARTY WITHOUT PRIOR WRITTEN CONSENT OF LC FUTURE CENTER.

Title: **SMART CARD I/F**

Size: Custom | Document Number | Rev: 0.1

Date: Thursday, May 02, 2013 | Sheet 53 of 100

Table MIC HW Enable/Disable

	Enable	Disable
R9097 R9105	No ASM ASM	ASM No ASM
R119	ASM	No ASM
L35 L36 R27 R31	ASM ASM No ASM No ASM	No ASM No ASM ASM ASM
U_R225 U_R226 R260 U_R290 U_Q30 Q165 C8467	ASM ASM ASM ASM ASM ASM ASM	No ASM No ASM No ASM No ASM No ASM No ASM No ASM

LOGIC

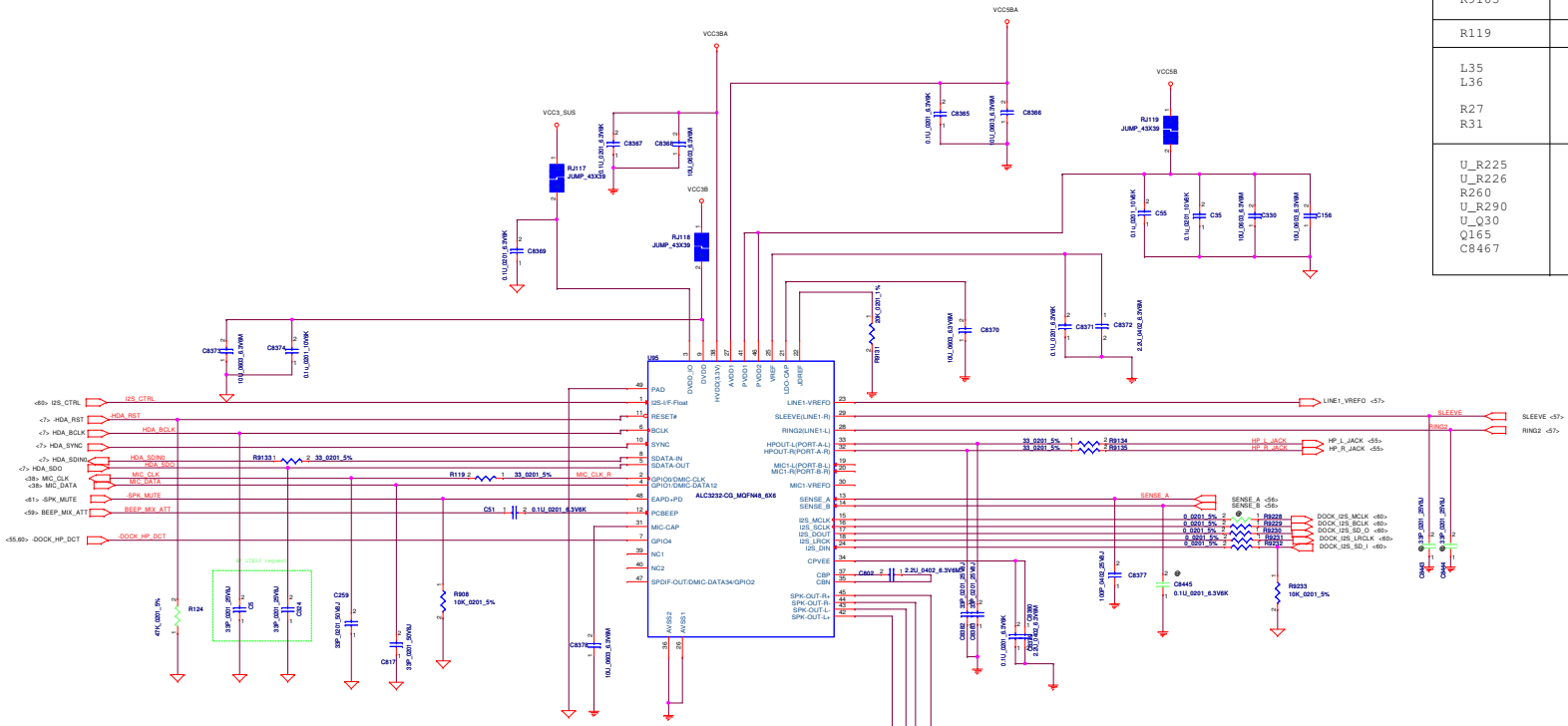

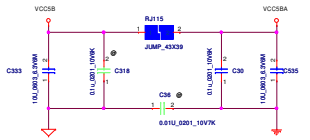

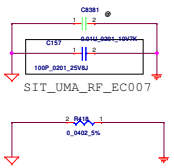

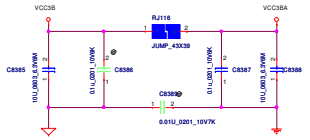

PLACE UNDER CODEC

Security Classification	LC Future Center Secret Data		
Issued Date	2012/05/02	Deciphered Date	2012/5/02

THIS SHEET OF ENGINEERING DRAWING IS THE PROPRIETARY PROPERTY OF LC FUTURE CENTER, AND CONTAINS CONFIDENTIAL AND TRADE SECRET INFORMATION. THIS SHEET MAY NOT BE TRANSFERRED FROM THE CUSTODY OF THE COMPETENT DIVISION OF R&D DEPARTMENT EXCEPT AS AUTHORIZED BY LC FUTURE CENTER NEITHER THIS SHEET NOR THE INFORMATION IT CONTAINS MAY BE USED BY OR DISCLOSED TO ANY THIRD PARTY WITHOUT PRIOR WRITTEN CONSENT OF LC FUTURE CENTER.

Title: Audio Codec

Size: D | Document Number: STING UMA | Rev: 0.1

Date: Friday, May 04, 2012 | Sheet 54 of 100

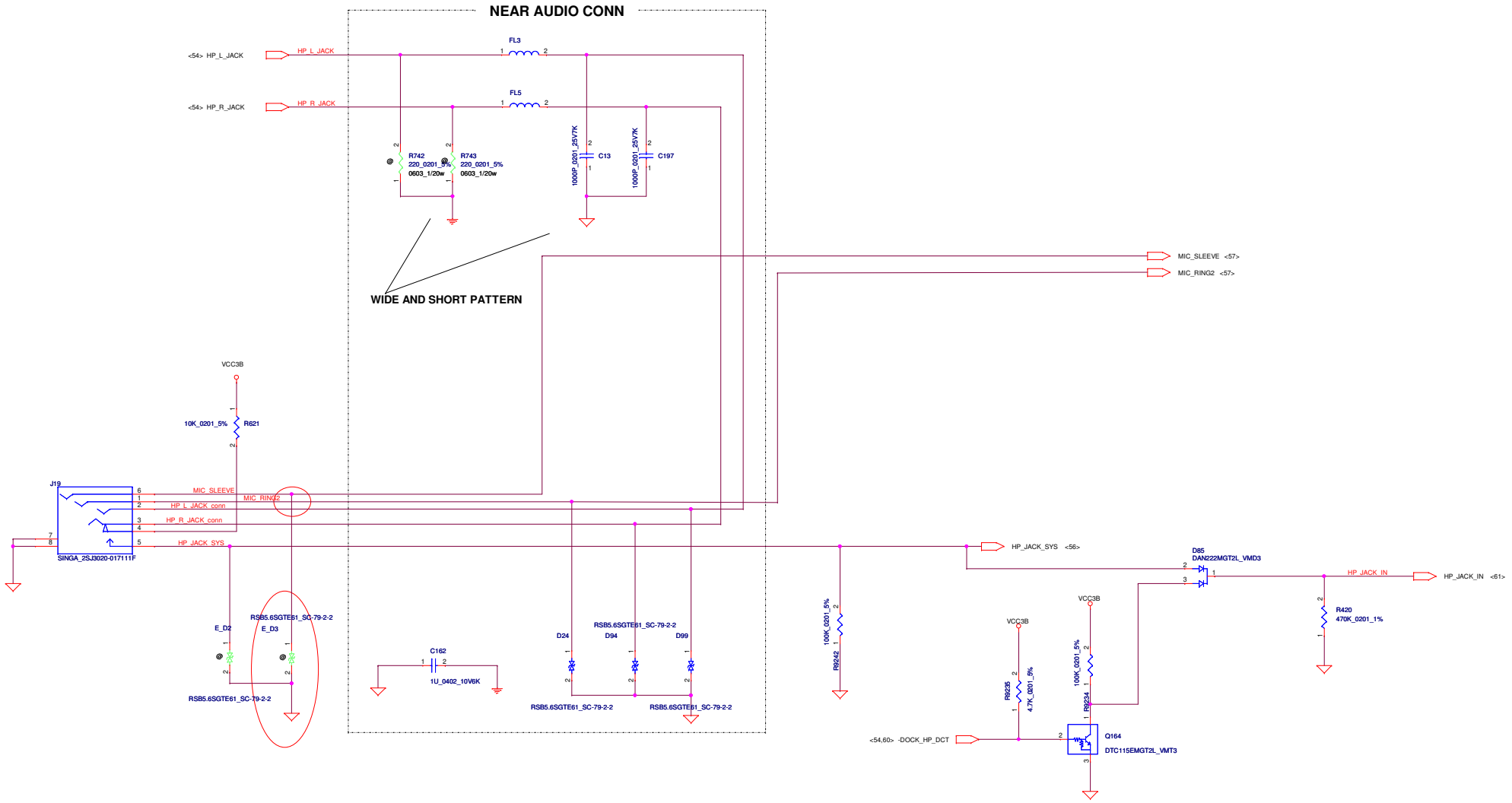

Security Classification	LC Future Center Secret Data		
Issued Date	2012/05/02	Deciphered Date	2012/5/02

THIS SHEET OF ENGINEERING DRAWING IS THE PROPRIETARY PROPERTY OF LC FUTURE CENTER, AND CONTAINS CONFIDENTIAL AND TRADE SECRET INFORMATION. THIS SHEET MAY NOT BE TRANSFERED FROM THE CUSTODY OF THE COMPETENT DIVISION OF R&D DEPARTMENT EXCEPT AS AUTHORIZED BY LC FUTURE CENTER NEITHER THIS SHEET NOR THE INFORMATION IT CONTAINS MAY BE USED BY OR DISCLOSED TO ANY THIRD PARTY WITHOUT PRIOR WRITTEN CONSENT OF LC FUTURE CENTER.

Title: **AUDIO CONNECTOR**

LCFC

Size: Custom | Document Number: C | STING UMA | Rev: 0.1

Date: Thursday, May 02, 2013 | Sheet 55 of 100

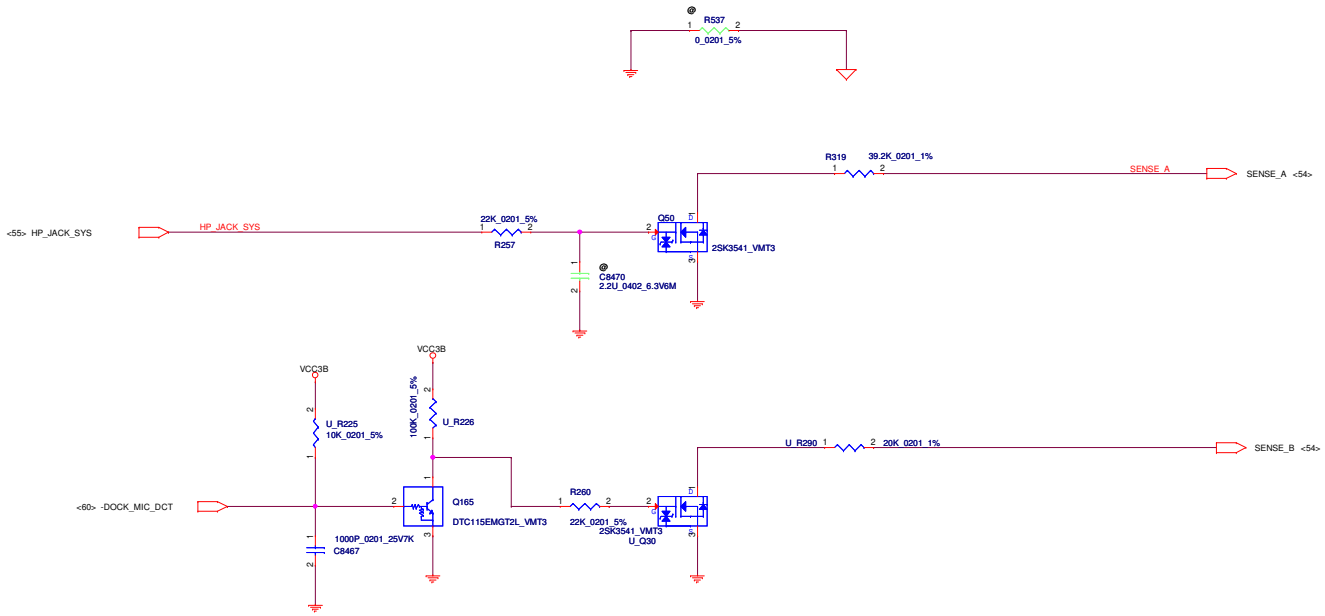

Security Classification	LC Future Center Secret Data		
Issued Date	2012/05/02	Deciphered Date	2012/5/02

THIS SHEET OF ENGINEERING DRAWING IS THE PROPRIETARY PROPERTY OF LC FUTURE CENTER, AND CONTAINS CONFIDENTIAL AND TRADE SECRET INFORMATION. THIS SHEET MAY NOT BE TRANSFERED FROM THE CUSTODY OF THE COMPETENT DIVISION OF R&D DEPARTMENT EXCEPT AS AUTHORIZED BY LC FUTURE CENTER NEITHER THIS SHEET NOR THE INFORMATION IT CONTAINS MAY BE USED BY OR DISCLOSED TO ANY THIRD PARTY WITHOUT PRIOR WRITTEN CONSENT OF LC FUTURE CENTER.

Title: **AUDIO JACK SENSE**

Size: Custom | Document Number: C | STING UMA | Rev: 0.1

Date: Thursday, May 02, 2013 | Sheet 56 of 100

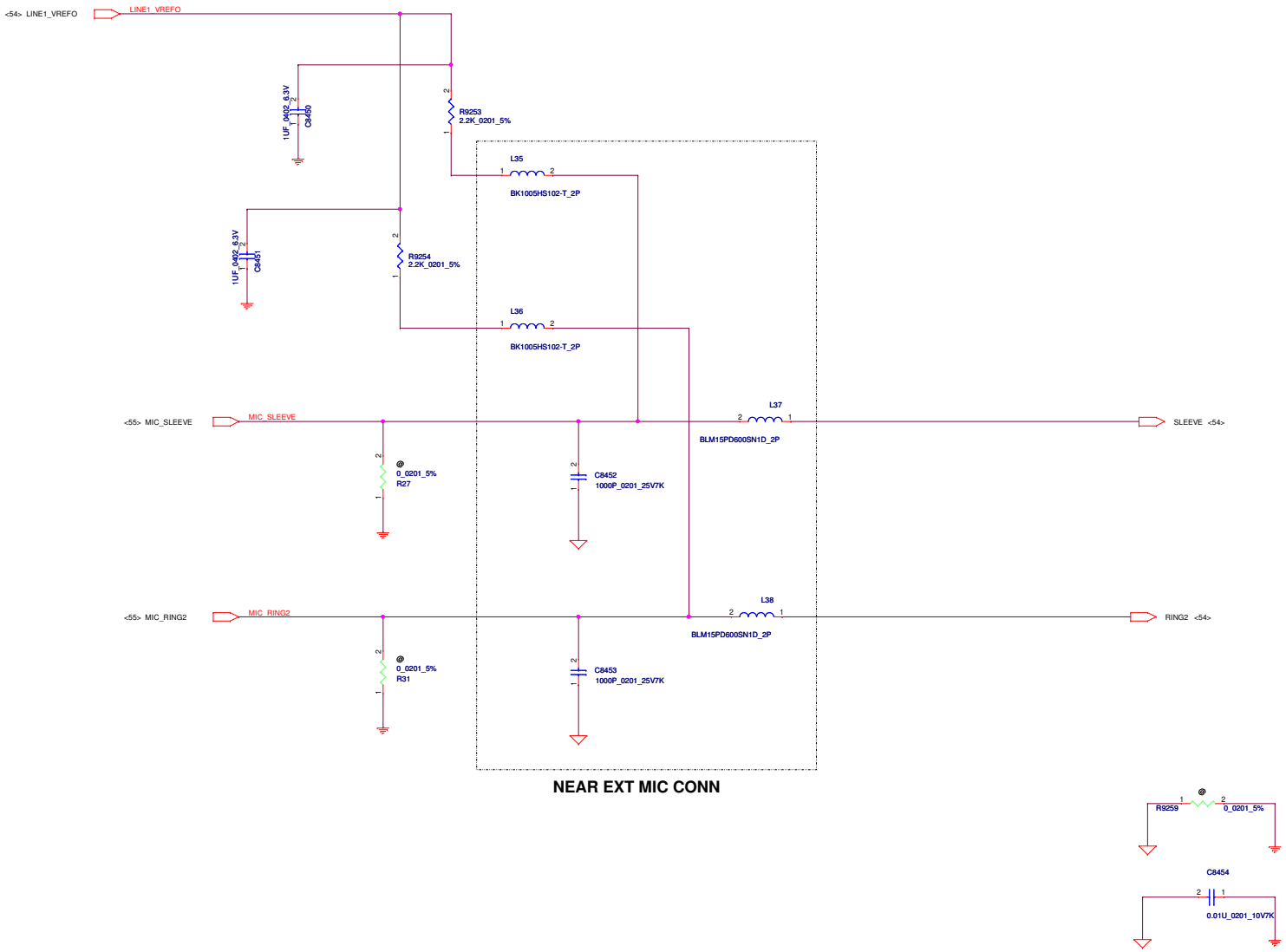

Security Classification	LC Future Center Secret Data		
Issued Date	2012/06/21	Deciphered Date	2012/06/21

THIS SHEET OF ENGINEERING DRAWING IS THE PROPRIETARY PROPERTY OF LC FUTURE CENTER, AND CONTAINS CONFIDENTIAL AND TRADE SECRET INFORMATION. THIS SHEET MAY NOT BE TRANSFERED FROM THE CUSTODY OF THE COMPETENT DIVISION OF R&D DEPARTMENT EXCEPT AS AUTHORIZED BY LC FUTURE CENTER NEITHER THIS SHEET NOR THE INFORMATION IT CONTAINS MAY BE USED BY OR DISCLOSED TO ANY THIRD PARTY WITHOUT PRIOR WRITTEN CONSENT OF LC FUTURE CENTER.

Title: AUDIO EXT MIC I/F

STING UMA

LCFC

Size	Document Number	Rev
Custom		0.1

Date: Thursday, May 02, 2013 | Sheet 57 of 100

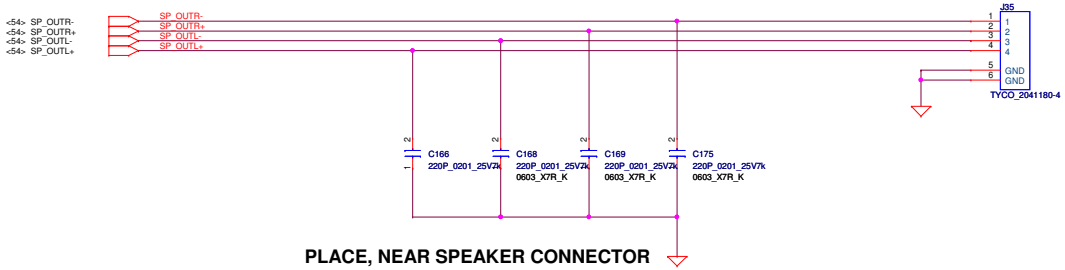

PLACE, NEAR SPEAKER CONNECTOR

Security Classification	LC Future Center Secret Data		
Issued Date	2012/05/02	Deciphered Date	2012/5/02

THIS SHEET OF ENGINEERING DRAWING IS THE PROPRIETARY PROPERTY OF LC FUTURE CENTER, AND CONTAINS CONFIDENTIAL AND TRADE SECRET INFORMATION. THIS SHEET MAY NOT BE TRANSFERED FROM THE CUSTODY OF THE COMPETENT DIVISION OF R&D DEPARTMENT EXCEPT AS AUTHORIZED BY LC FUTURE CENTER NEITHER THIS SHEET NOR THE INFORMATION IT CONTAINS MAY BE USED BY OR DISCLOSED TO ANY THIRD PARTY WITHOUT PRIOR WRITTEN CONSENT OF LC FUTURE CENTER.

Title
AUDIO SPEAKER

Size: Custom | Document Number: C | STING UMA | Rev: 0.1

Date: Thursday, May 02, 2013 | Sheet 58 of 100

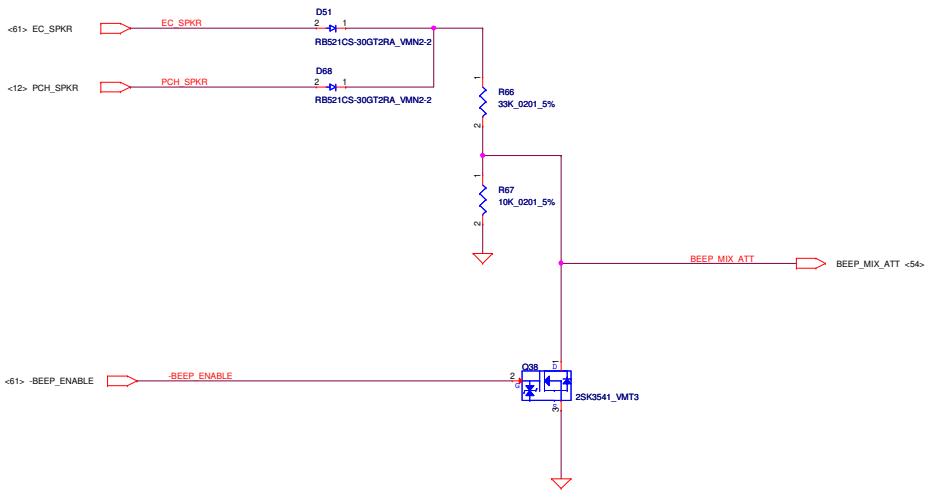

Security Classification	LC Future Center Secret Data		
Issued Date	2012/05/02	Deciphered Date	2012/5/02

THIS SHEET OF ENGINEERING DRAWING IS THE PROPRIETARY PROPERTY OF LC FUTURE CENTER, AND CONTAINS CONFIDENTIAL AND TRADE SECRET INFORMATION. THIS SHEET MAY NOT BE TRANSFERED FROM THE CUSTODY OF THE COMPETENT DIVISION OF R&D DEPARTMENT EXCEPT AS AUTHORIZED BY LC FUTURE CENTER NEITHER THIS SHEET NOR THE INFORMATION IT CONTAINS MAY BE USED BY OR DISCLOSED TO ANY THIRD PARTY WITHOUT PRIOR WRITTEN CONSENT OF LC FUTURE CENTER.

Title
AUDIO BEEP

Size: Custom | Document Number: STING UMA | Rev: 0.1

Date: Thursday, May 02, 2013 | Sheet 59 of 100

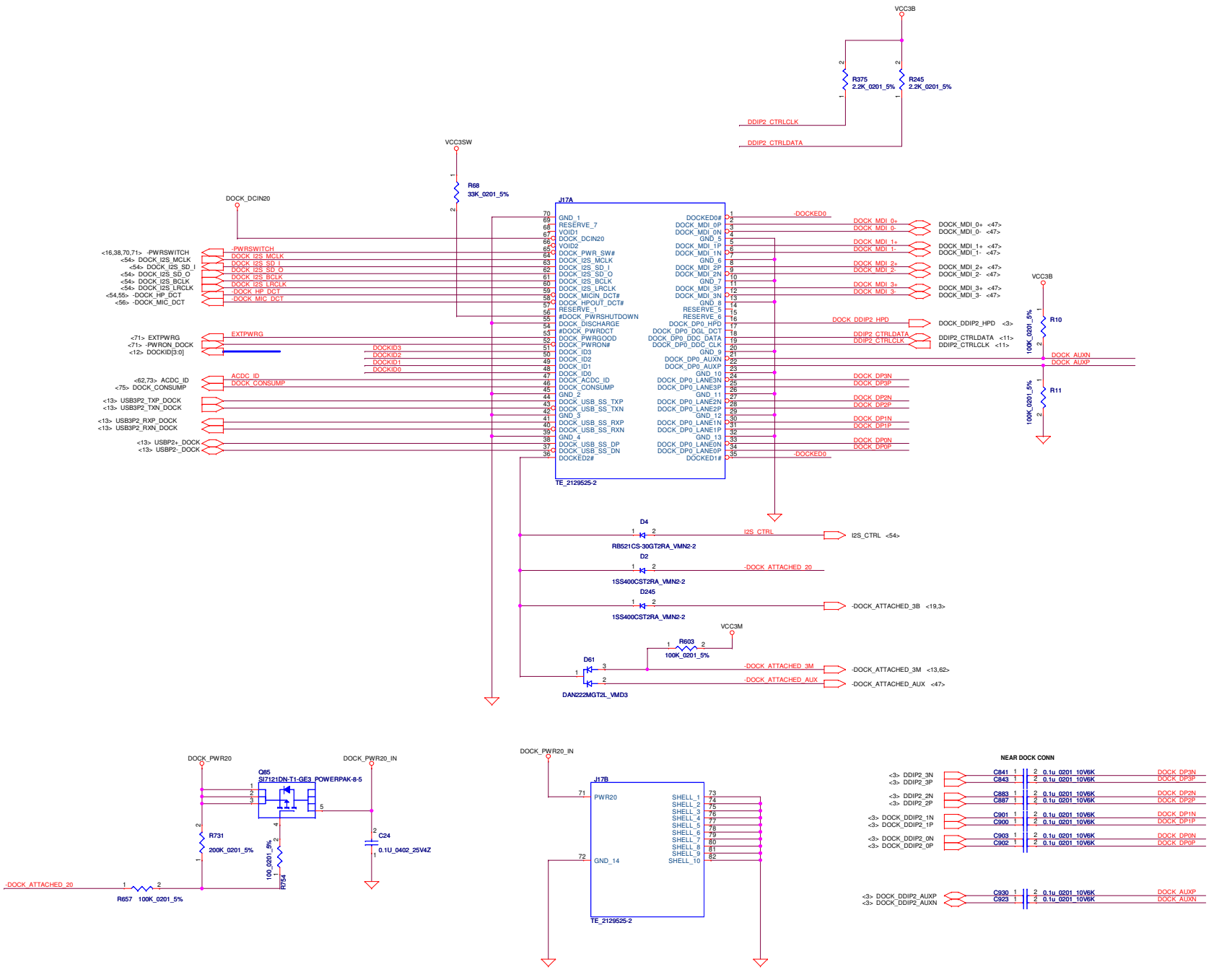

Security Classification	LC Future Center Secret Data		
Issued Date	2012/05/02	Deciphered Date	2012/5/02

THIS SHEET OF ENGINEERING DRAWING IS THE PROPRIETARY PROPERTY OF LC FUTURE CENTER, AND CONTAINS CONFIDENTIAL AND TRADE SECRET INFORMATION. THIS SHEET MAY NOT BE TRANSFERED FROM THE CUSTODY OF THE COMPETENT DIVISION OF R&D DEPARTMENT EXCEPT AS AUTHORIZED BY LC FUTURE CENTER NEITHER THIS SHEET NOR THE INFORMATION IT CONTAINS MAY BE USED BY OR DISCLOSED TO ANY THIRD PARTY WITHOUT PRIOR WRITTEN CONSENT OF LC FUTURE CENTER.

Title: **DOCKING CONNECTOR**

Size: custom | Document Number: **STING UMA** | Rev: 0.1

Date: Thursday, May 02, 2013 | Sheet 60 of 100

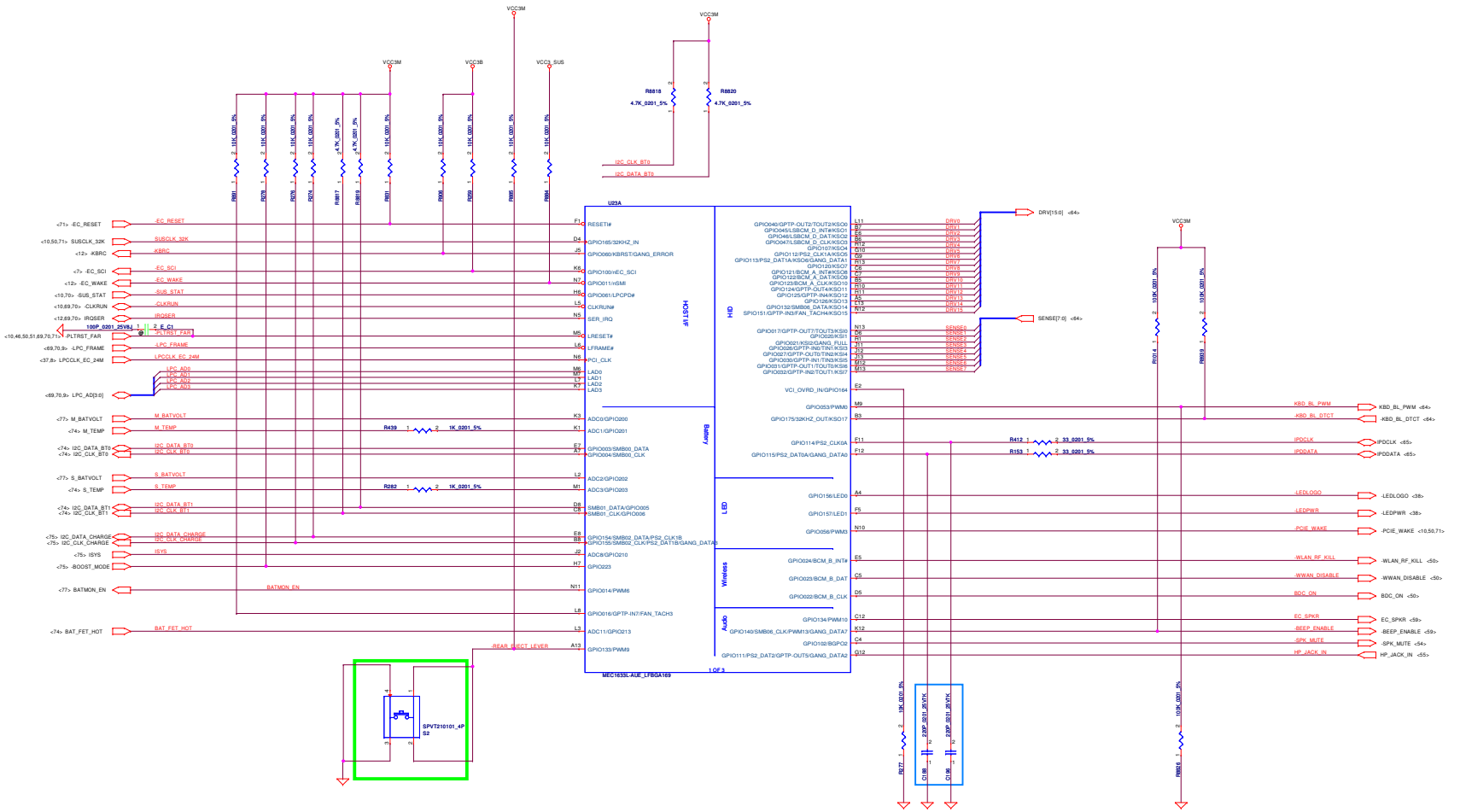

Security Classification	LC Future Center Secret Data		Title
Issued Date	2012/05/01	Deciphered Date 2012/12/01	EC - MEC1633L (1/3)

THIS SHEET OF ENGINEERING DRAWING IS THE PROPRIETARY PROPERTY OF LC FUTURE CENTER, AND CONTAINS CONFIDENTIAL AND TRADE SECRET INFORMATION. THIS SHEET MAY NOT BE TRANSFERED FROM THE CUSTODY OF THE COMPETENT DIVISION OF R&D DEPARTMENT EXCEPT AS AUTHORIZED BY LC FUTURE CENTER NEITHER THIS SHEET NOR THE INFORMATION IT CONTAINS MAY BE USED BY OR DISCLOSED TO ANY THIRD PARTY WITHOUT PRIOR WRITTEN CONSENT OF LC FUTURE CENTER.

Size	Document Number	Rev
D	STING UMA	0.1

Date: Monday, May 06, 2013 Sheet 61 of 100

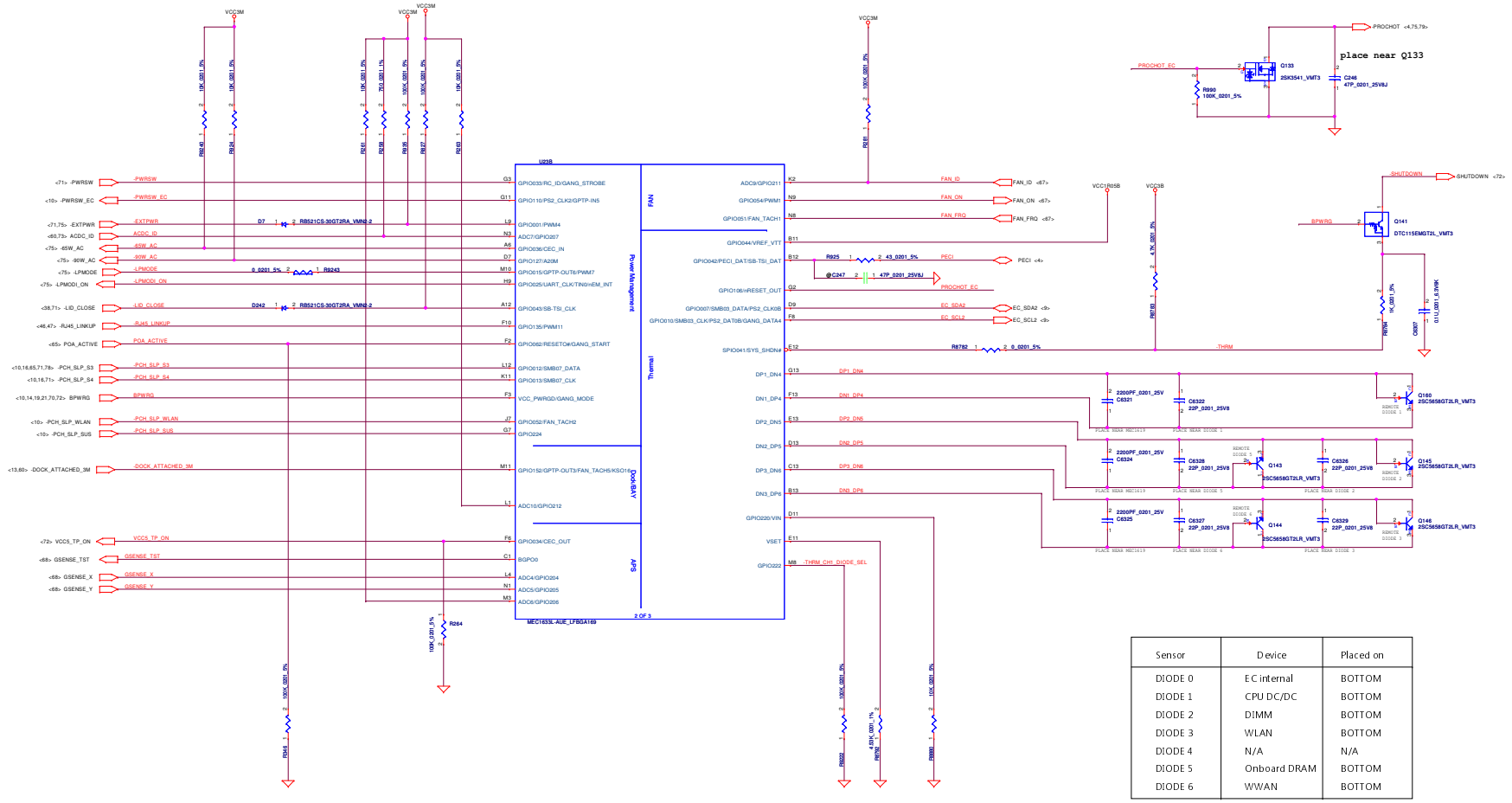

Sensor	Device	Placed on
DIODE 0	EC internal	BOTTOM
DIODE 1	CPU DC/DC	BOTTOM
DIODE 2	DIMM	BOTTOM
DIODE 3	WLAN	BOTTOM
DIODE 4	N/A	N/A
DIODE 5	Onboard DRAM	BOTTOM
DIODE 6	WWAN	BOTTOM

Security Classification	LC Future Center Secret Data		Title
Issued Date	2012/05/01	Deciphered Date 2012/12/01	EC - MEC1633L (2/3)

THIS SHEET OF ENGINEERING DRAWING IS THE PROPRIETARY PROPERTY OF LC FUTURE CENTER, AND CONTAINS CONFIDENTIAL AND TRADE SECRET INFORMATION. THIS SHEET MAY NOT BE TRANSFERRED FROM THE CUSTODY OF THE COMPETENT DIVISION OF R&D DEPARTMENT EXCEPT AS AUTHORIZED BY LC FUTURE CENTER NEITHER THIS SHEET NOR THE INFORMATION IT CONTAINS MAY BE USED BY OR DISCLOSED TO ANY THIRD PARTY WITHOUT PRIOR WRITTEN CONSENT OF LC FUTURE CENTER.

Size D | Document Number STING UMA | Rev 0.1

Date: Monday, May 06, 2013 | Sheet 62 of 100

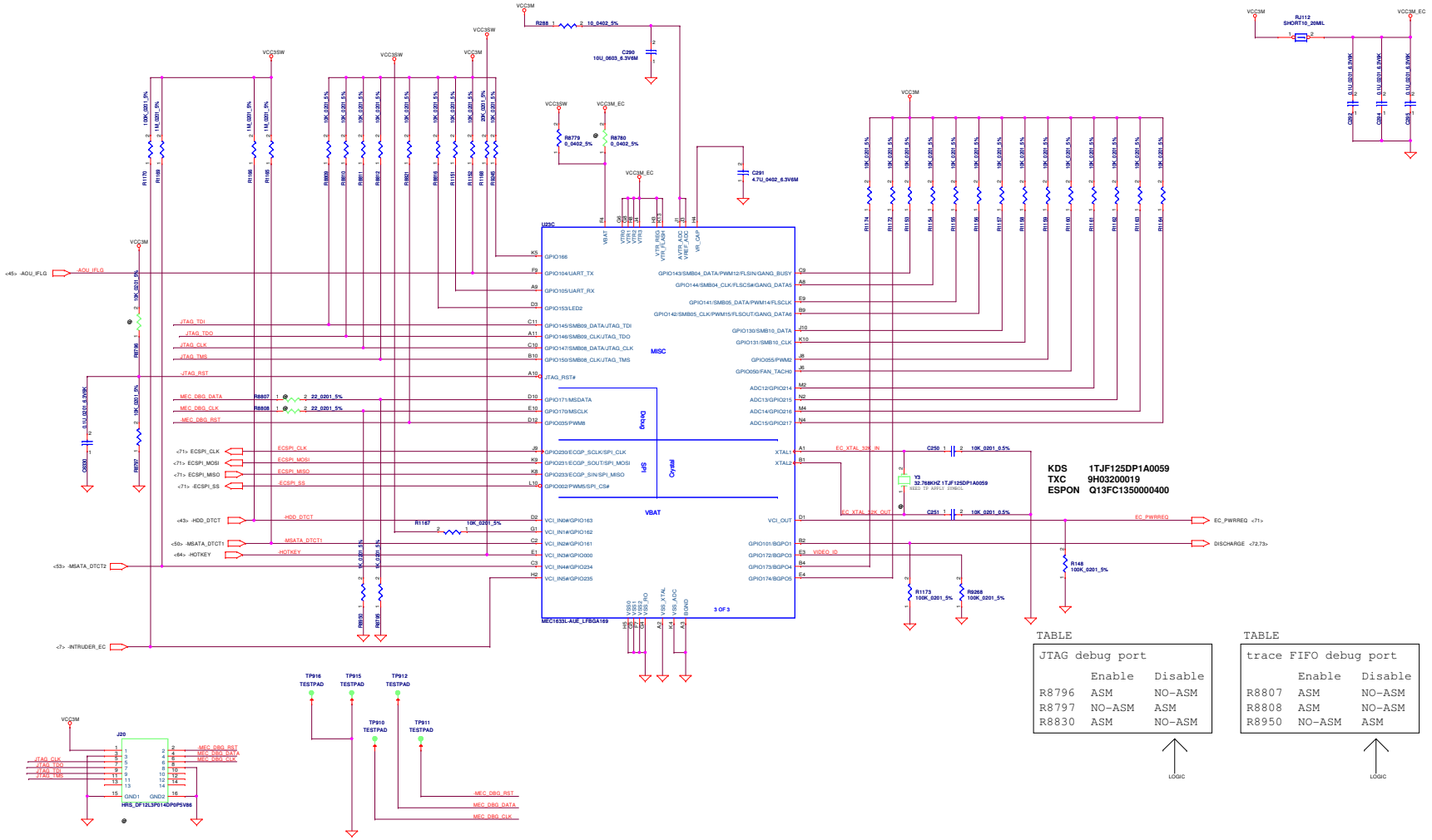

TABLE

JTAG debug port		
	Enable	Disable
R8796	ASM	NO-ASM
R8797	NO-ASM	ASM
R8830	ASM	NO-ASM

LOGIC

TABLE

trace FIFO debug port		
	Enable	Disable
R8807	ASM	NO-ASM
R8808	ASM	NO-ASM
R8950	NO-ASM	ASM

LOGIC

Security Classification	LC Future Center Secret Data		Title
Issued Date	2012/05/01	Deciphered Date 2012/12/01	EC - MEC1633L (3/3)

THIS SHEET OF ENGINEERING DRAWING IS THE PROPRIETARY PROPERTY OF LC FUTURE CENTER, AND CONTAINS CONFIDENTIAL AND TRADE SECRET INFORMATION. THIS SHEET MAY NOT BE TRANSFERRED FROM THE CUSTODY OF THE COMPETENT DIVISION OF R&D DEPARTMENT EXCEPT AS AUTHORIZED BY LC FUTURE CENTER NEITHER THIS SHEET NOR THE INFORMATION IT CONTAINS MAY BE USED BY OR DISCLOSED TO ANY THIRD PARTY WITHOUT PRIOR WRITTEN CONSENT OF LC FUTURE CENTER.

Size D | Document Number STING DNA | Rev 0.1

Date: Monday, May 06, 2013 | Sheet 63 of 100

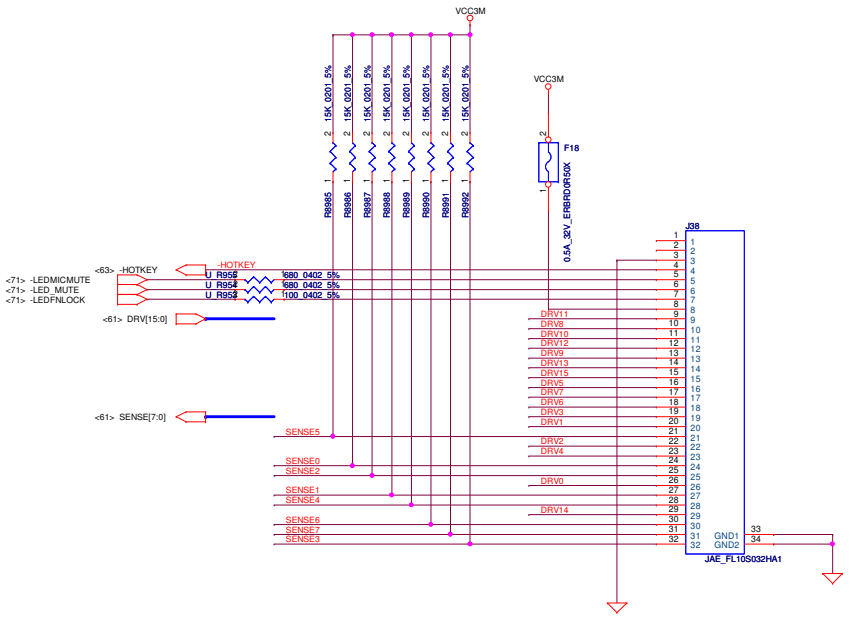

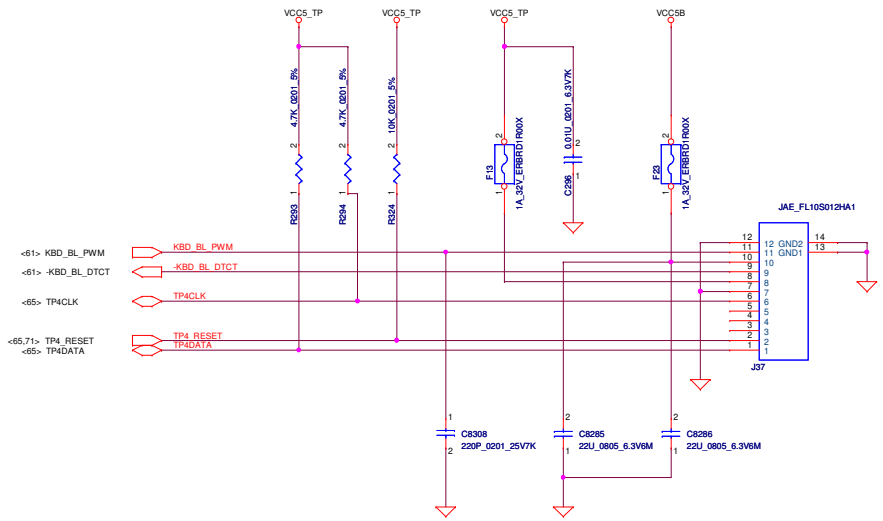

Security Classification	LC Future Center Secret Data		
Issued Date	2012/05/01	Deciphered Date	2012/12/01

THIS SHEET OF ENGINEERING DRAWING IS THE PROPRIETARY PROPERTY OF LC FUTURE CENTER, AND CONTAINS CONFIDENTIAL AND TRADE SECRET INFORMATION. THIS SHEET MAY NOT BE TRANSFERED FROM THE CUSTODY OF THE COMPETENT DIVISION OF R&D DEPARTMENT EXCEPT AS AUTHORIZED BY LC FUTURE CENTER NEITHER THIS SHEET NOR THE INFORMATION IT CONTAINS MAY BE USED BY OR DISCLOSED TO ANY THIRD PARTY WITHOUT PRIOR WRITTEN CONSENT OF LC FUTURE CENTER.

Title: KEYBOARD CONNECTOR

Size: Custom | Document Number: STING UMA | Rev: 0.1

Date: Thursday, May 02, 2013 | Sheet 64 of 100

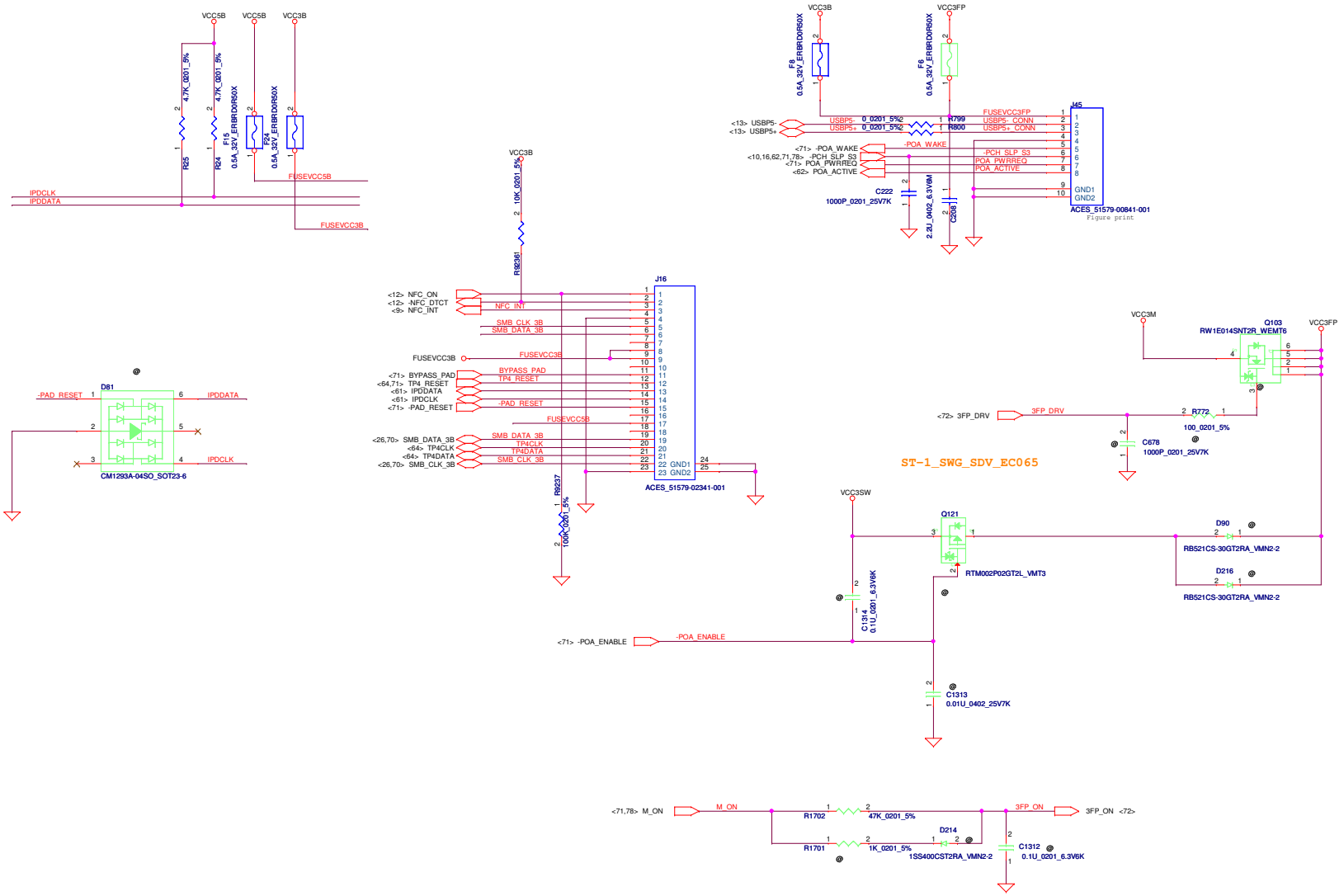

Security Classification	LC Future Center Secret Data		
Issued Date	2012/05/02	Deciphered Date	2012/5/02

THIS SHEET OF ENGINEERING DRAWING IS THE PROPRIETARY PROPERTY OF LC FUTURE CENTER. AND CONTAINS CONFIDENTIAL AND TRADE SECRET INFORMATION. THIS SHEET MAY NOT BE TRANSFERED FROM THE CUSTODY OF THE COMPETENT DIVISION OF R&D DEPARTMENT EXCEPT AS AUTHORIZED BY LC FUTURE CENTER NEITHER THIS SHEET NOR THE INFORMATION IT CONTAINS MAY BE USED BY OR DISCLOSED TO ANY THIRD PARTY WITHOUT PRIOR WRITTEN CONSENT OF LC FUTURE CENTER.

Title: **TOUCH PAD CONNECTOR**

LCFC

Size: Custom | Document Number: STING UMA | Rev: 0.1

Date: Thursday, May 02, 2013 | Sheet 65 of 100

BLANK

Security Classification	LC Future Center Secret Data		
Issued Date	2012/05/02	Deciphered Date	2012/5/02

THIS SHEET OF ENGINEERING DRAWING IS THE PROPRIETARY PROPERTY OF LC FUTURE CENTER, AND CONTAINS CONFIDENTIAL AND TRADE SECRET INFORMATION. THIS SHEET MAY NOT BE TRANSFERED FROM THE CUSTODY OF THE COMPETENT DIVISION OF R&D DEPARTMENT EXCEPT AS AUTHORIZED BY LC FUTURE CENTER NEITHER THIS SHEET NOR THE INFORMATION IT CONTAINS MAY BE USED BY OR DISCLOSED TO ANY THIRD PARTY WITHOUT PRIOR WRITTEN CONSENT OF LC FUTURE CENTER.

Title
BLANK

Size	Document Number	Rev
Custom		0.1

Date: Thursday, May 02, 2013 | Sheet 66 of 100

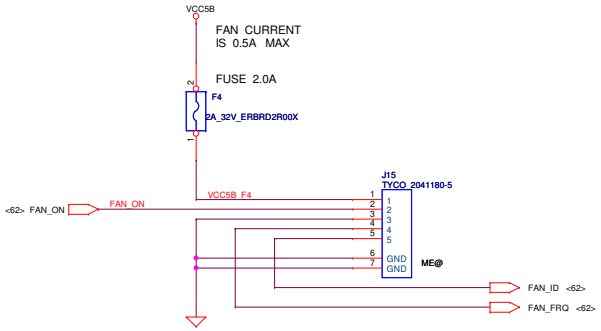

Security Classification	LC Future Center Secret Data		
Issued Date	2012/05/02	Deciphered Date	2012/5/02

THIS SHEET OF ENGINEERING DRAWING IS THE PROPRIETARY PROPERTY OF LC FUTURE CENTER, AND CONTAINS CONFIDENTIAL AND TRADE SECRET INFORMATION. THIS SHEET MAY NOT BE TRANSFERED FROM THE CUSTODY OF THE COMPETENT DIVISION OF R&D DEPARTMENT EXCEPT AS AUTHORIZED BY LC FUTURE CENTER NEITHER THIS SHEET NOR THE INFORMATION IT CONTAINS MAY BE USED BY OR DISCLOSED TO ANY THIRD PARTY WITHOUT PRIOR WRITTEN CONSENT OF LC FUTURE CENTER.

Title
FAN CONNECTOR

Size: Custom | Document Number: STING UMA | Rev: 0.1

Date: Thursday, May 02, 2013 | Sheet 67 of 100

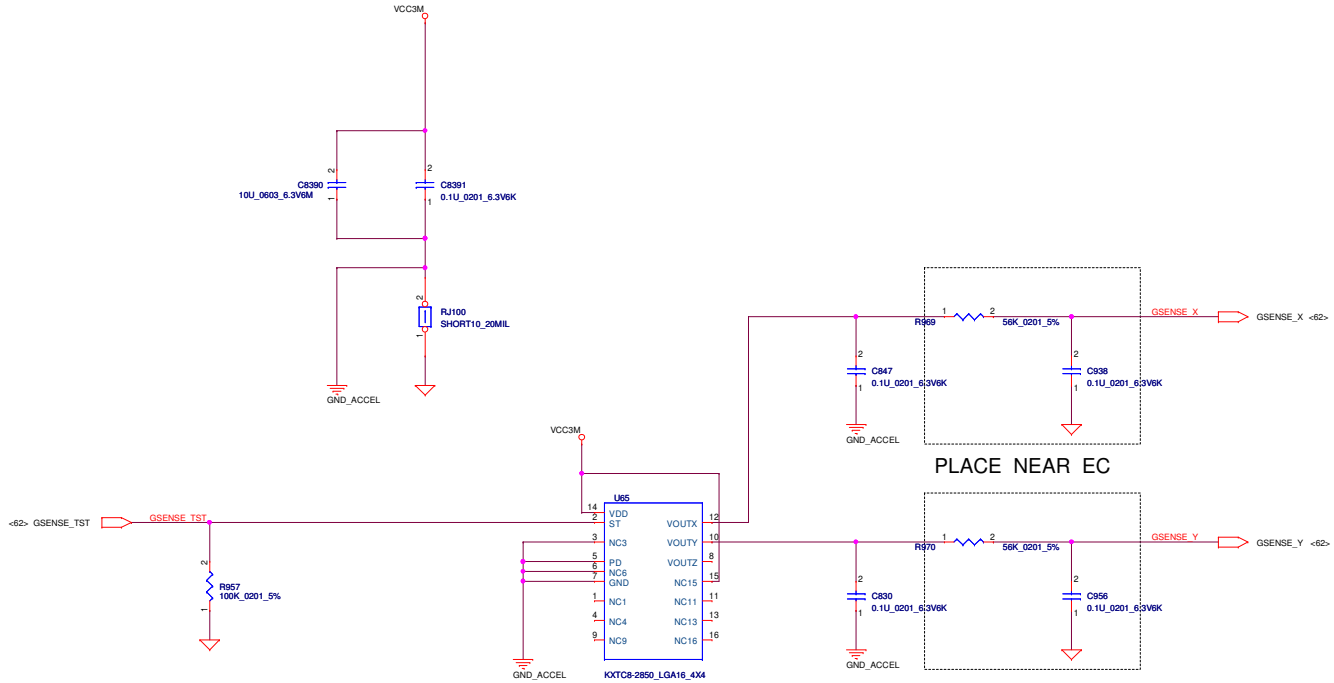

LOGIC

TABLE

	LIS34AL KXTC8-2850	NO ACC.
R401 R957	NO_ASM ASM	ASM ASM
U65 Q105	ASM ASM	NO_ASM NO_ASM
R885 C829 C969	10-OHM ASM ASM	NO_ASM NO_ASM NO_ASM
C830 C847	ASM ASM	NO_ASM NO_ASM
R969 C938 R970 C956	56K ASM 56K ASM	NO_ASM NO_ASM NO_ASM NO_ASM
C704 R344 C703	NO_ASM NO_ASM NO_ASM	NO_ASM NO_ASM NO_ASM
R125	ASM	ASM

Security Classification	LC Future Center Secret Data		
Issued Date	2012/06/21	Deciphered Date	2012/06/21

THIS SHEET OF ENGINEERING DRAWING IS THE PROPRIETARY PROPERTY OF LC FUTURE CENTER, AND CONTAINS CONFIDENTIAL AND TRADE SECRET INFORMATION. THIS SHEET MAY NOT BE TRANSFERED FROM THE CUSTODY OF THE COMPETENT DIVISION OF R&D DEPARTMENT EXCEPT AS AUTHORIZED BY LC FUTURE CENTER NEITHER THIS SHEET NOR THE INFORMATION IT CONTAINS MAY BE USED BY OR DISCLOSED TO ANY THIRD PARTY WITHOUT PRIOR WRITTEN CONSENT OF LC FUTURE CENTER.

Title
G-SENSOR

STING UMA

Size: Custom | Document Number | Rev 0.1

Date: Thursday, May 02, 2013 | Sheet 68 of 100

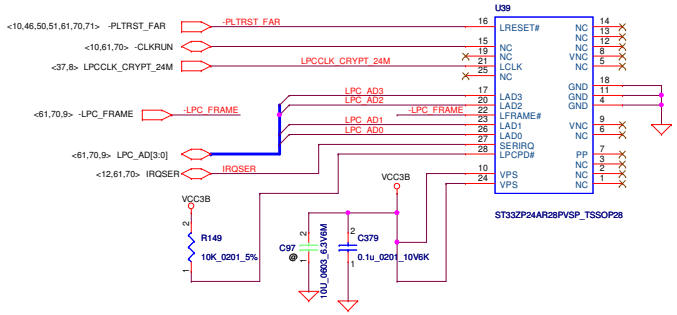

Security Classification	LC Future Center Secret Data		
Issued Date	2012/05/02	Deciphered Date	2012/5/02

THIS SHEET OF ENGINEERING DRAWING IS THE PROPRIETARY PROPERTY OF LC FUTURE CENTER, AND CONTAINS CONFIDENTIAL AND TRADE SECRET INFORMATION. THIS SHEET MAY NOT BE TRANSFERED FROM THE CUSTODY OF THE COMPETENT DIVISION OF R&D DEPARTMENT EXCEPT AS AUTHORIZED BY LC FUTURE CENTER NEITHER THIS SHEET NOR THE INFORMATION IT CONTAINS MAY BE USED BY OR DISCLOSED TO ANY THIRD PARTY WITHOUT PRIOR WRITTEN CONSENT OF LC FUTURE CENTER.

Title: TPM

Size: Custom | Document Number: STING UMA | Rev: 0.1

Date: Thursday, May 02, 2013 | Sheet 69 of 100

TABLE

EEPROM	U22	U23
U22	ASM	NO_ASM
C1005	ASM	NO_ASM
R577	ASM	NO_ASM
Q97	ASM	NO_ASM

LOGIC

TABLE

REF DES	ENABLE	DISABLE
J5	ASM	NO_ASM
R220	ASM	NO_ASM

LOGIC

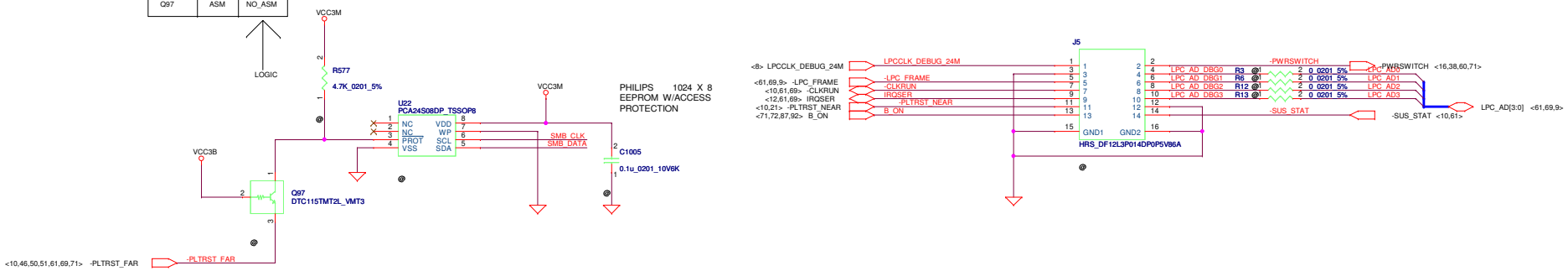

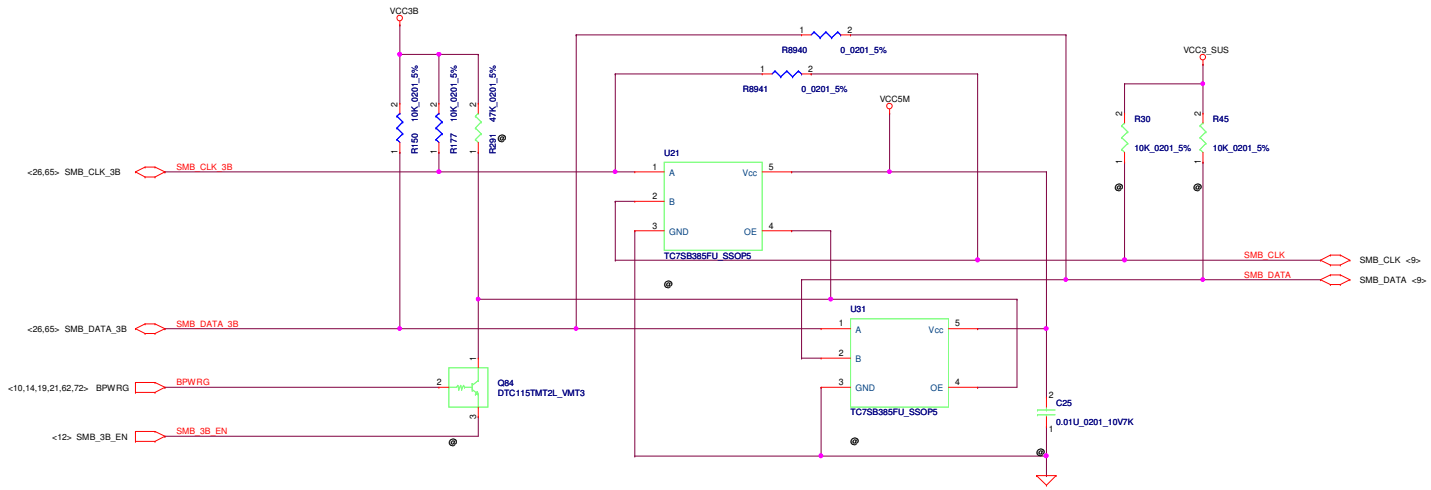

TABLE

EEPROM	U22	U23
U21	ASM	NO_ASM
U31	ASM	NO_ASM
C25	ASM	NO_ASM
R291	ASM	NO_ASM
Q84	ASM	NO_ASM
R8941	NO_ASM	ASM
R8940	NO_ASM	ASM
R30	ASM	NO_ASM
R45	ASM	NO_ASM

LOGIC

Security Classification	LC Future Center Secret Data		
Issued Date	2012/05/02	Deciphered Date	2012/5/02

THIS SHEET OF ENGINEERING DRAWING IS THE PROPRIETARY PROPERTY OF LC FUTURE CENTER, AND CONTAINS CONFIDENTIAL AND TRADE SECRET INFORMATION. THIS SHEET MAY NOT BE TRANSFERED FROM THE CUSTODY OF THE COMPETENT DIVISION OF R&D DEPARTMENT EXCEPT AS AUTHORIZED BY LC FUTURE CENTER NEITHER THIS SHEET NOR THE INFORMATION IT CONTAINS MAY BE USED BY OR DISCLOSED TO ANY THIRD PARTY WITHOUT PRIOR WRITTEN CONSENT OF LC FUTURE CENTER.

Title: EEPROM/SMBUS SW

Size: custom | Document Number: STING UMA | Rev: 0.1

Date: Thursday, May 02, 2013 | Sheet 70 of 100

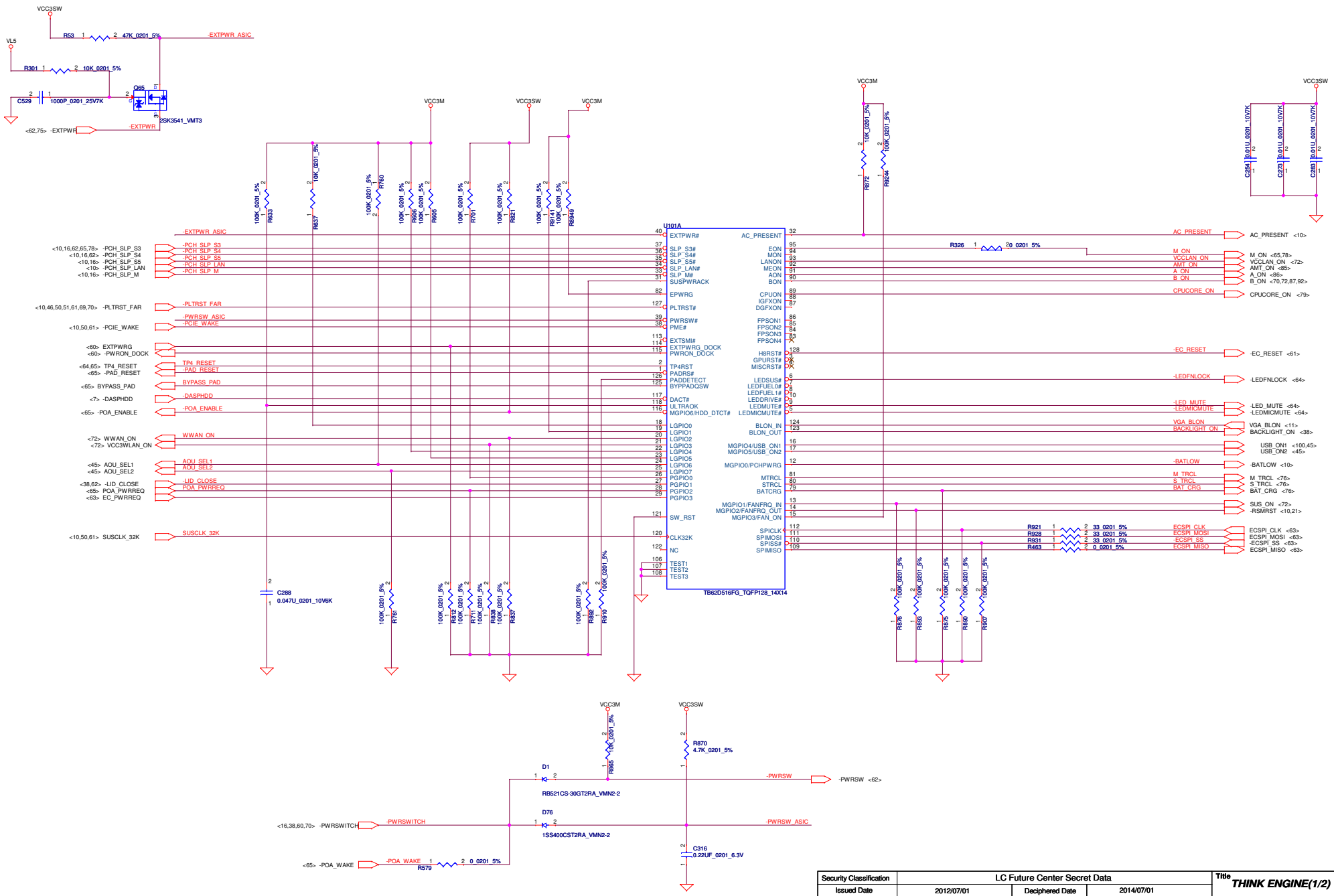

Security Classification	LC Future Center Secret Data		
Issued Date	2012/07/01	Deciphered Date	2014/07/01

THIS SHEET OF ENGINEERING DRAWING IS THE PROPRIETARY PROPERTY OF LC FUTURE CENTER, AND CONTAINS CONFIDENTIAL AND TRADE SECRET INFORMATION. THIS SHEET MAY NOT BE TRANSFERED FROM THE CUSTODY OF THE COMPETENT DIVISION OF R&D DEPARTMENT EXCEPT AS AUTHORIZED BY LC FUTURE CENTER NEITHER THIS SHEET NOR THE INFORMATION IT CONTAINS MAY BE USED BY OR DISCLOSED TO ANY THIRD PARTY WITHOUT PRIOR WRITTEN CONSENT OF LC FUTURE CENTER.

Title: **THINK ENGINE(1/2)**

LCFC

Size	Document Number	Rev
Custom		0.1

Date: Thursday, May 02, 2013 | Sheet 71 of 100

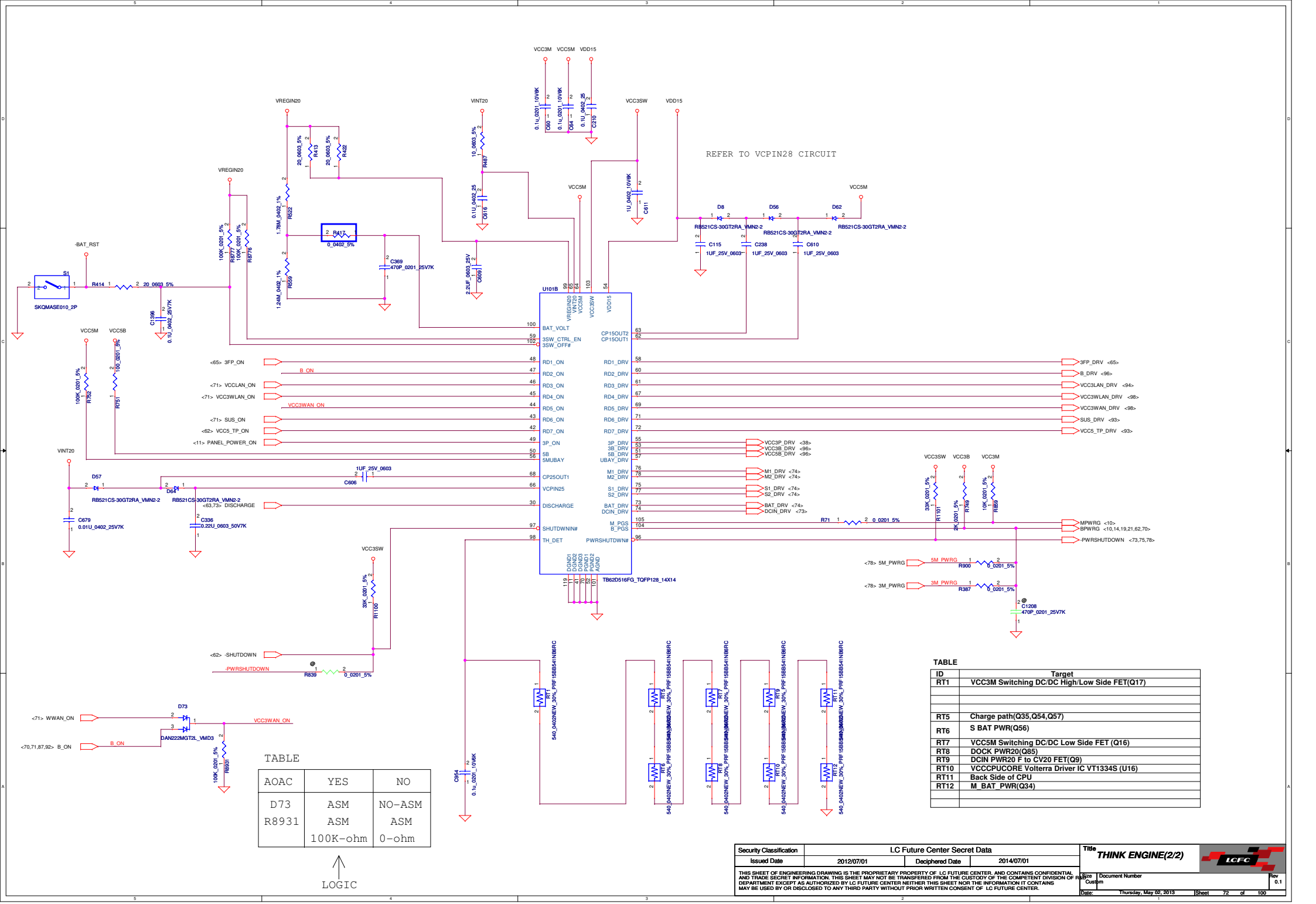

TABLE

AOAC	YES	NO
D73	ASM	NO-ASM
R8931	ASM	ASM
	100K-ohm	0-ohm

LOGIC

TABLE

ID	Target
RT1	VCC3M Switching DC/DC High/Low Side FET(Q17)
RT5	Charge path(Q35,Q54,Q57)
RT6	S BAT PWR(Q56)
RT7	VCC5M Switching DC/DC Low Side FET (Q16)
RT8	DOCK PWR20(Q85)
RT9	DCIN PWR20 F to CV20 FET(Q9)
RT10	VCCCPUCORE Volterra Driver IC VT1334S (U16)
RT11	Back Side of CPU
RT12	M_BAT_PWR(Q34)

Security Classification	LC Future Center Secret Data		
Issued Date	2012/07/01	Deciphered Date	2014/07/01

THIS SHEET OF ENGINEERING DRAWING IS THE PROPRIETARY PROPERTY OF LC FUTURE CENTER. AND CONTAINS CONFIDENTIAL AND TRADE SECRET INFORMATION. THIS SHEET MAY NOT BE TRANSFERED FROM THE CUSTODY OF THE COMPETENT DIVISION OF R&D DEPARTMENT EXCEPT AS AUTHORIZED BY LC FUTURE CENTER NEITHER THIS SHEET NOR THE INFORMATION IT CONTAINS MAY BE USED BY OR DISCLOSED TO ANY THIRD PARTY WITHOUT PRIOR WRITTEN CONSENT OF LC FUTURE CENTER.

Title: THINK ENGINE(2/2)

Size: Custom | Document Number | Rev 0.1

Date: Thursday, May 02, 2013 | Sheet 72 of 100

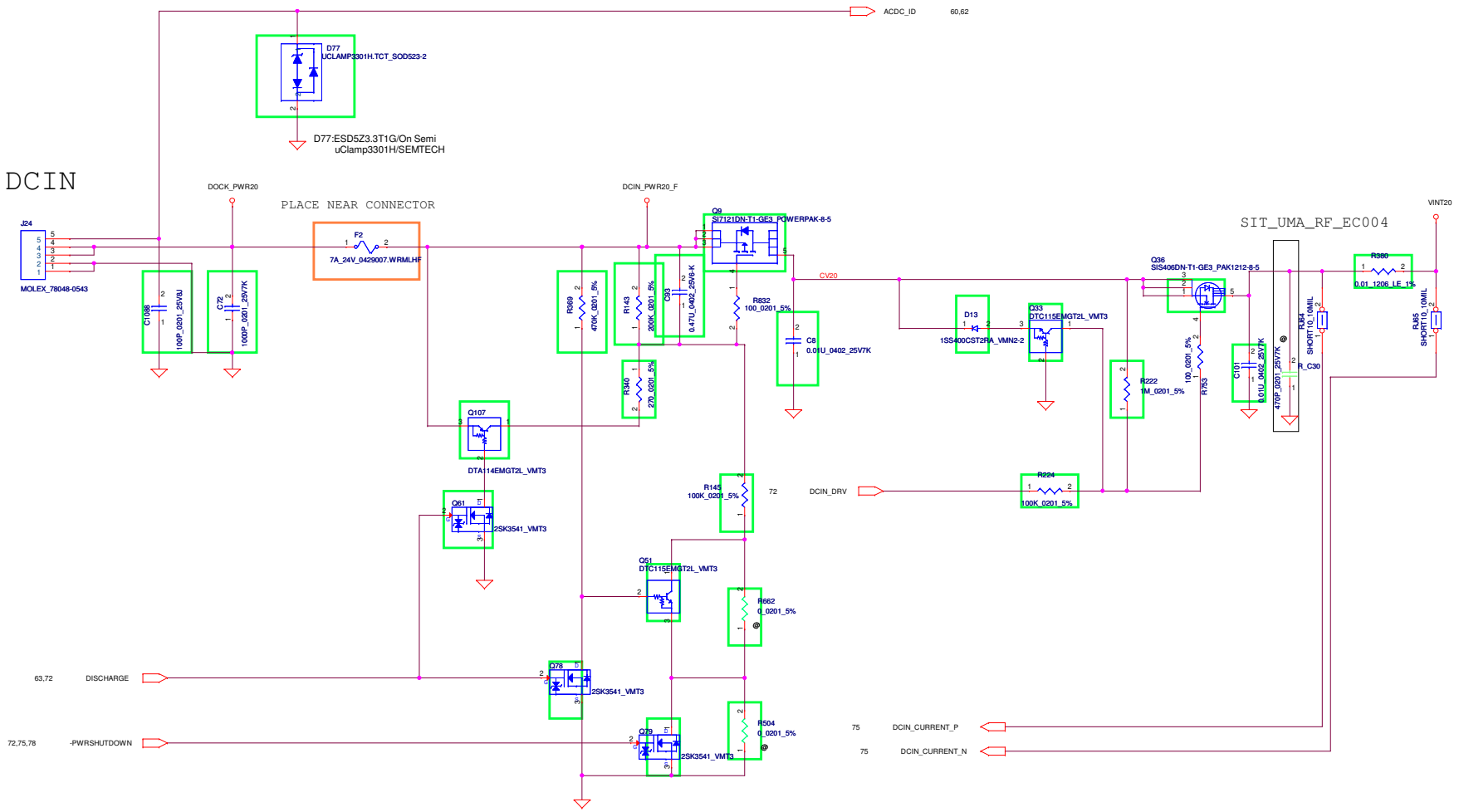

TABLE

PEAK SHIFT	YES	NO
R662	NO-ASM	ASM
R369	ASM	NO-ASM
Q78	ASM	NO-ASM
Q51	ASM	NO-ASM

LOGIC

Security Classification	LC Future Center Secret Data		
Issued Date	2012/11/01	Deciphered Date	2013/12/31

THIS SHEET OF ENGINEERING DRAWING IS THE PROPRIETARY PROPERTY OF LC FUTURE CENTER, AND CONTAINS CONFIDENTIAL AND TRADE SECRET INFORMATION. THIS SHEET MAY NOT BE TRANSFERED FROM THE CUSTODY OF THE COMPETENT DIVISION OF R&D DEPARTMENT EXCEPT AS AUTHORIZED BY LC FUTURE CENTER NEITHER THIS SHEET NOR THE INFORMATION IT CONTAINS MAY BE USED BY OR DISCLOSED TO ANY THIRD PARTY WITHOUT PRIOR WRITTEN CONSENT OF LC FUTURE CENTER.

Title: **DC-IN**

Size: custom | Document Number: **Sting UMA** | Rev: 0.1

Date: Thursday, May 02, 2013 | Sheet 73 of 100

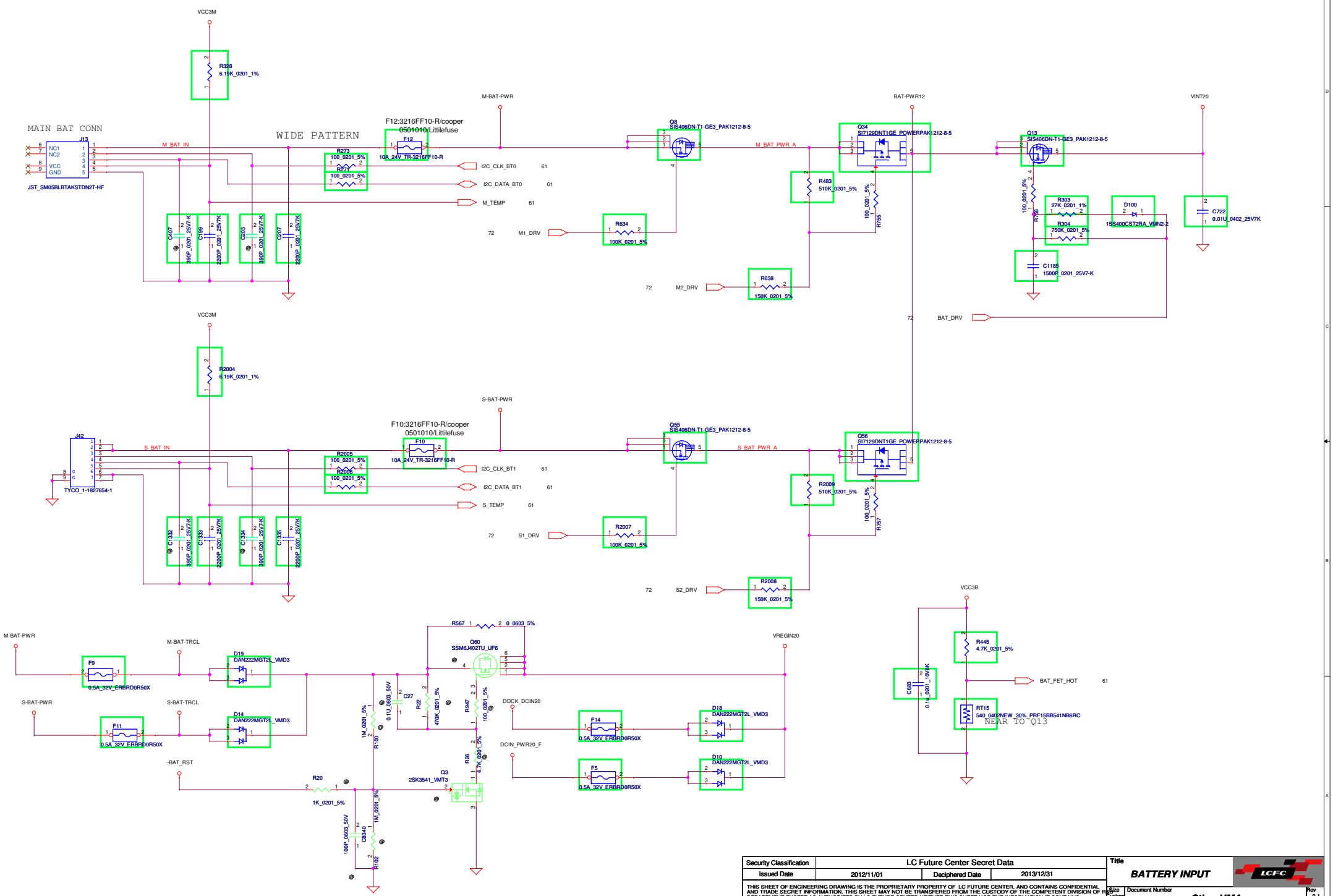

Security Classification	LC Future Center Secret Data		
Issued Date	2012/11/01	Deciphered Date	2013/12/31

THIS SHEET OF ENGINEERING DRAWING IS THE PROPRIETARY PROPERTY OF LC FUTURE CENTER, AND CONTAINS CONFIDENTIAL AND TRADE SECRET INFORMATION. THIS SHEET MAY NOT BE TRANSFERED FROM THE CUSTODY OF THE COMPETENT DIVISION OF R&D DEPARTMENT EXCEPT AS AUTHORIZED BY LC FUTURE CENTER NEITHER THIS SHEET NOR THE INFORMATION IT CONTAINS MAY BE USED BY OR DISCLOSED TO ANY THIRD PARTY WITHOUT PRIOR WRITTEN CONSENT OF LC FUTURE CENTER.

Title: **BATTERY INPUT**

Size: custom | Document Number: **Sting UMA** | Rev: 0.1

Date: Thursday, May 02, 2013 | Sheet 74 of 100

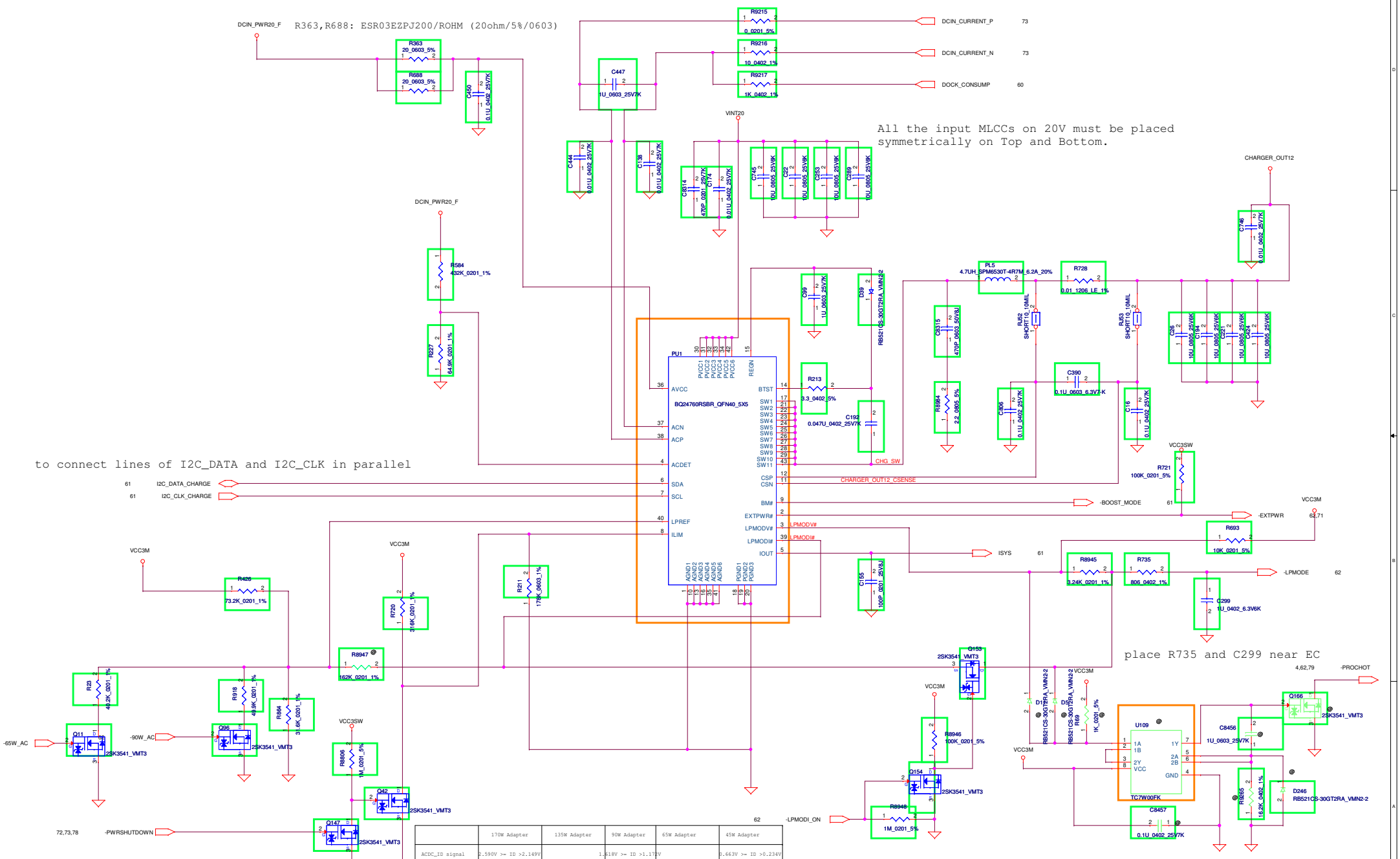

	170W Adapter	135W Adapter	90W Adapter	65W Adapter	45W Adapter
ACDC_ID signal	2.590V >= ID >2.149V	2.109V >= ID >1.663V	1.618V >= ID >1.172V	1.134V >= ID >0.693V	0.663V >= ID >0.234V
-65W_AC signal	Low	Low	Low	Low	High
-90W_AC signal	Low	Low	Low	High	High

Security Classification	LC Future Center Secret Data		
Issued Date	2012/11/01	Deciphered Date	2013/12/31

THIS SHEET OF ENGINEERING DRAWING IS THE PROPRIETARY PROPERTY OF LC FUTURE CENTER, AND CONTAINS CONFIDENTIAL AND TRADE SECRET INFORMATION. THIS SHEET MAY NOT BE TRANSFERRED FROM THE CUSTODY OF THE COMPETENT DIVISION OF R&D DEPARTMENT EXCEPT AS AUTHORIZED BY LC FUTURE CENTER NEITHER THIS SHEET NOR THE INFORMATION IT CONTAINS MAY BE USED BY OR DISCLOSED TO ANY THIRD PARTY WITHOUT PRIOR WRITTEN CONSENT OF LC FUTURE CENTER.

Title: **BATTERY CHARGER(BQ24760)**

Size: custom | Document Number: **Sting UMA** | Rev: 0.1

Date: Thursday, May 02, 2013 | Sheet 75 of 100

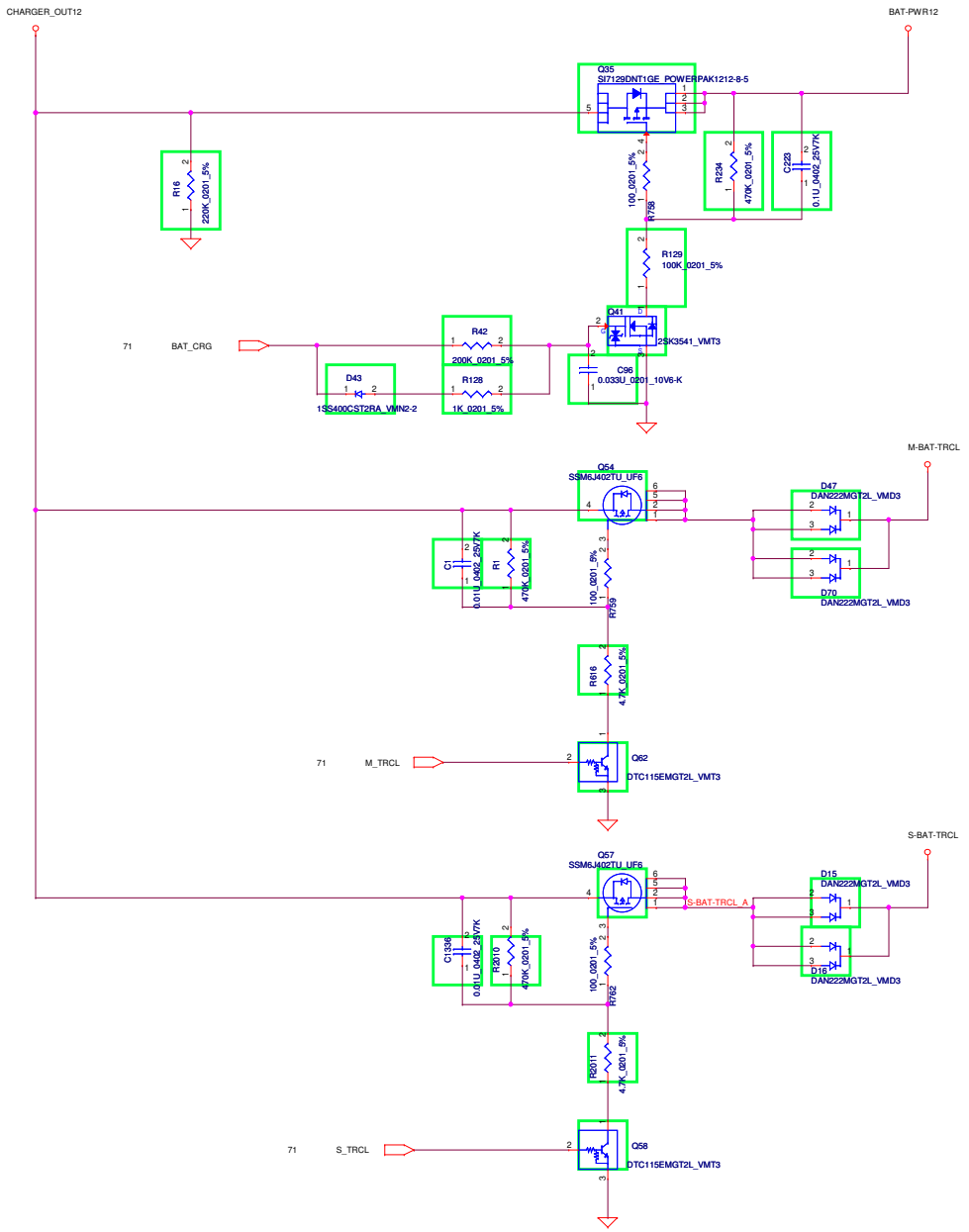

Security Classification	LC Future Center Secret Data		
Issued Date	2012/11/01	Deciphered Date	2013/12/31

THIS SHEET OF ENGINEERING DRAWING IS THE PROPRIETARY PROPERTY OF LC FUTURE CENTER, AND CONTAINS CONFIDENTIAL AND TRADE SECRET INFORMATION. THIS SHEET MAY NOT BE TRANSFERED FROM THE CUSTODY OF THE COMPETENT DIVISION OF R&D DEPARTMENT EXCEPT AS AUTHORIZED BY LC FUTURE CENTER NEITHER THIS SHEET NOR THE INFORMATION IT CONTAINS MAY BE USED BY OR DISCLOSED TO ANY THIRD PARTY WITHOUT PRIOR WRITTEN CONSENT OF LC FUTURE CENTER.

Title: **CHARGER SELECTOR**

Size: custom | Document Number: **Sting UMA** | Rev: 0.1

Date: Thursday, May 02, 2013 | Sheet 76 of 100

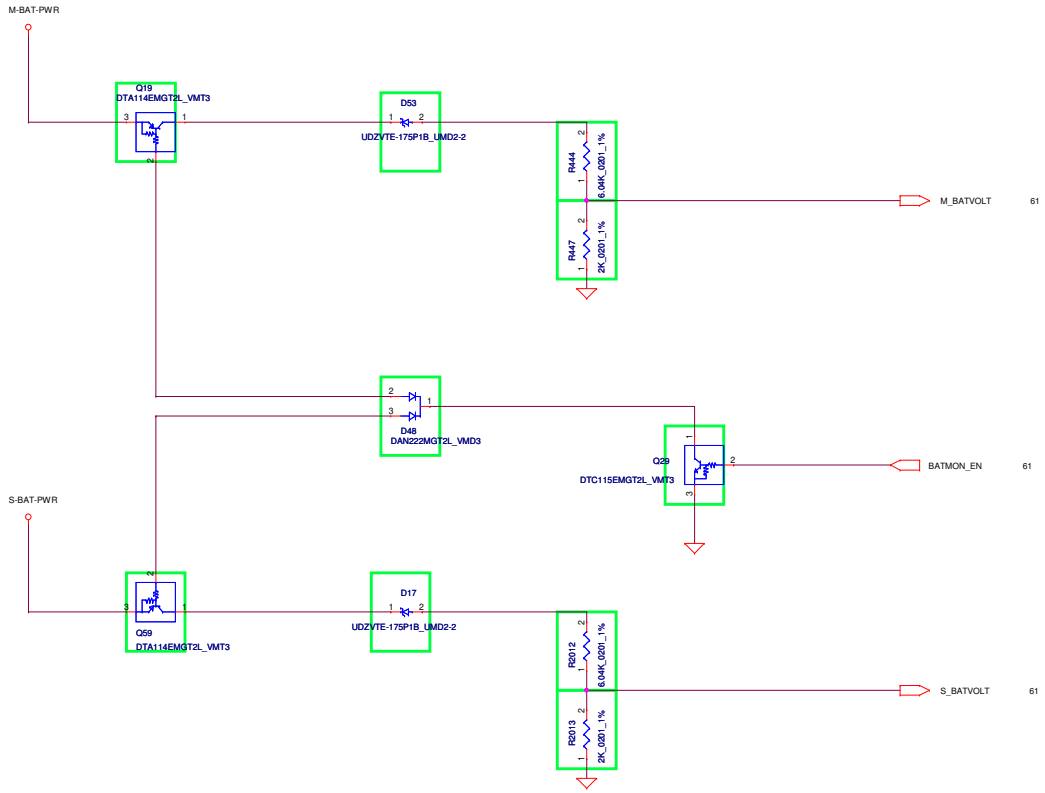

Security Classification	LC Future Center Secret Data		
Issued Date	2012/11/01	Deciphered Date	2013/12/31

THIS SHEET OF ENGINEERING DRAWING IS THE PROPRIETARY PROPERTY OF LC FUTURE CENTER, AND CONTAINS CONFIDENTIAL AND TRADE SECRET INFORMATION. THIS SHEET MAY NOT BE TRANSFERED FROM THE CUSTODY OF THE COMPETENT DIVISION OF R&D DEPARTMENT EXCEPT AS AUTHORIZED BY LC FUTURE CENTER NEITHER THIS SHEET NOR THE INFORMATION IT CONTAINS MAY BE USED BY OR DISCLOSED TO ANY THIRD PARTY WITHOUT PRIOR WRITTEN CONSENT OF LC FUTURE CENTER.

Title

BATTERY MONITOR

Size	Document Number	Rev
Custom	Sting UMA	0.1

Date: Thursday, May 02, 2013 | Sheet 77 of 100

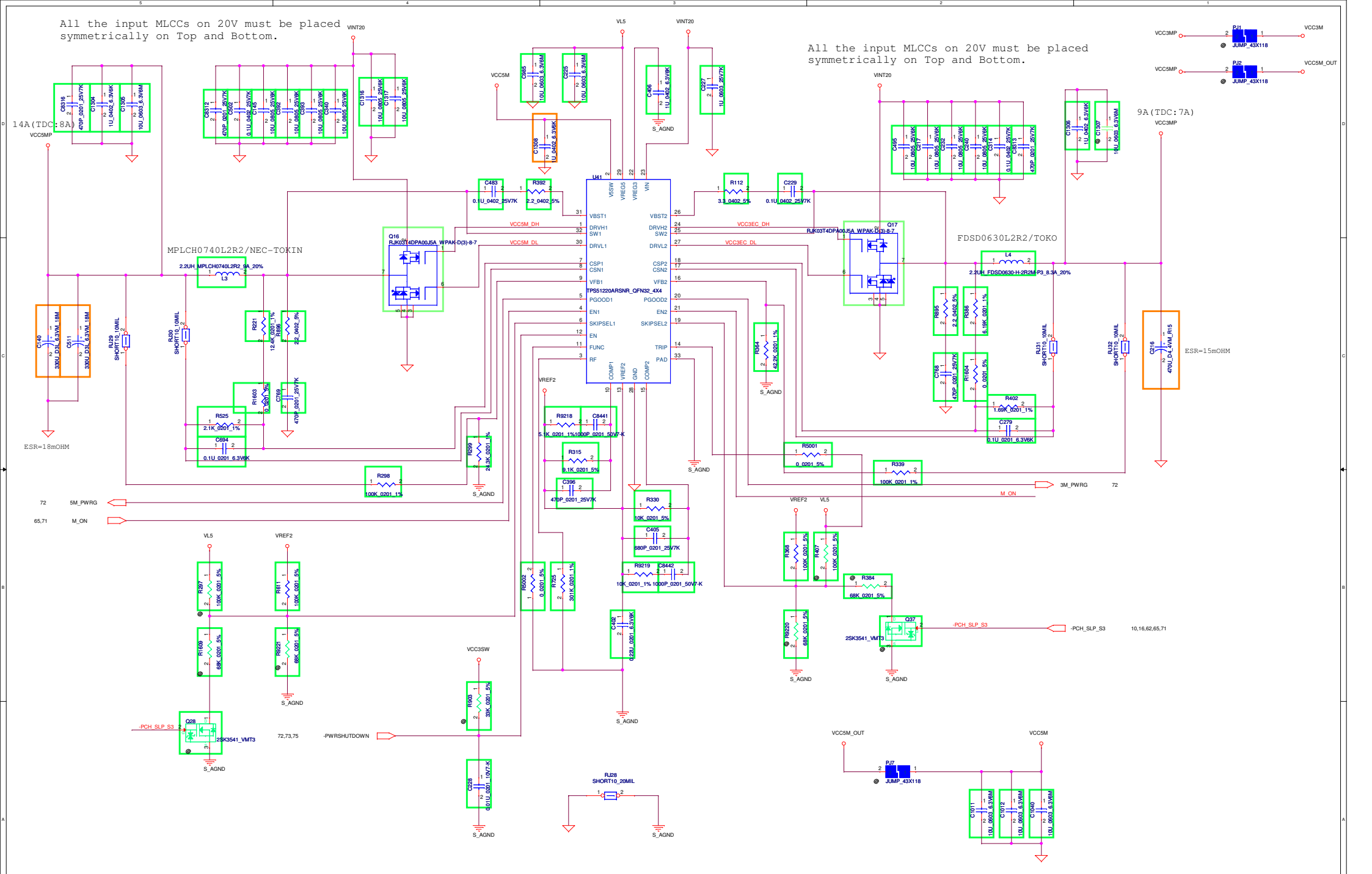

Security Classification	LC Future Center Secret Data		
Issued Date	2012/11/01	Deciphered Date	2013/12/31

THIS SHEET OF ENGINEERING DRAWING IS THE PROPRIETARY PROPERTY OF LC FUTURE CENTER. AND CONTAINS CONFIDENTIAL AND TRADE SECRET INFORMATION. THIS SHEET MAY NOT BE TRANSFERED FROM THE CUSTODY OF THE COMPETENT DIVISION OF R&D DEPARTMENT EXCEPT AS AUTHORIZED BY LC FUTURE CENTER NEITHER THIS SHEET NOR THE INFORMATION IT CONTAINS MAY BE USED BY OR DISCLOSED TO ANY THIRD PARTY WITHOUT PRIOR WRITTEN CONSENT OF LC FUTURE CENTER.

Title: DC/DC VCC5M/VCC3M(TPS51220A)

Size: custom | Document Number: Sting UMA | Rev: 0.1

Date: Thursday, May 02, 2013 | Sheet 78 of 100

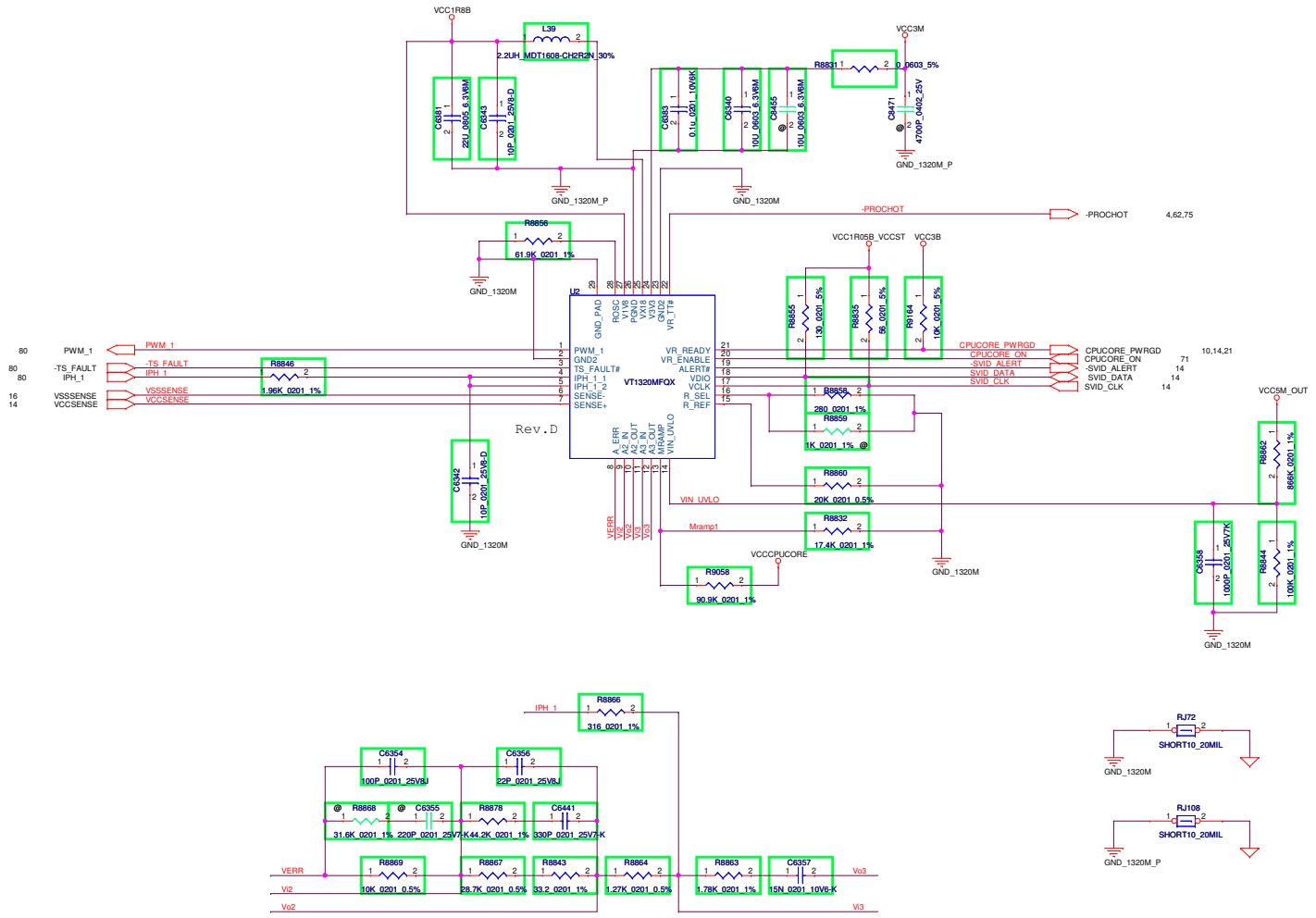

Security Classification	LC Future Center Secret Data		
Issued Date	2012/11/01	Deciphered Date	2013/12/31

THIS SHEET OF ENGINEERING DRAWING IS THE PROPRIETARY PROPERTY OF LC FUTURE CENTER, AND CONTAINS CONFIDENTIAL AND TRADE SECRET INFORMATION. THIS SHEET MAY NOT BE TRANSFERED FROM THE CUSTODY OF THE COMPETENT DIVISION OF R&D DEPARTMENT EXCEPT AS AUTHORIZED BY LC FUTURE CENTER NEITHER THIS SHEET NOR THE INFORMATION IT CONTAINS MAY BE USED BY OR DISCLOSED TO ANY THIRD PARTY WITHOUT PRIOR WRITTEN CONSENT OF LC FUTURE CENTER.

Title: *DC/DC VCCCPUCORE(VT1320M)*

Size: custom | Document Number: ***Sting UMA*** | Rev: 0.1

Date: Thursday, May 02, 2013 | Sheet 79 of 100

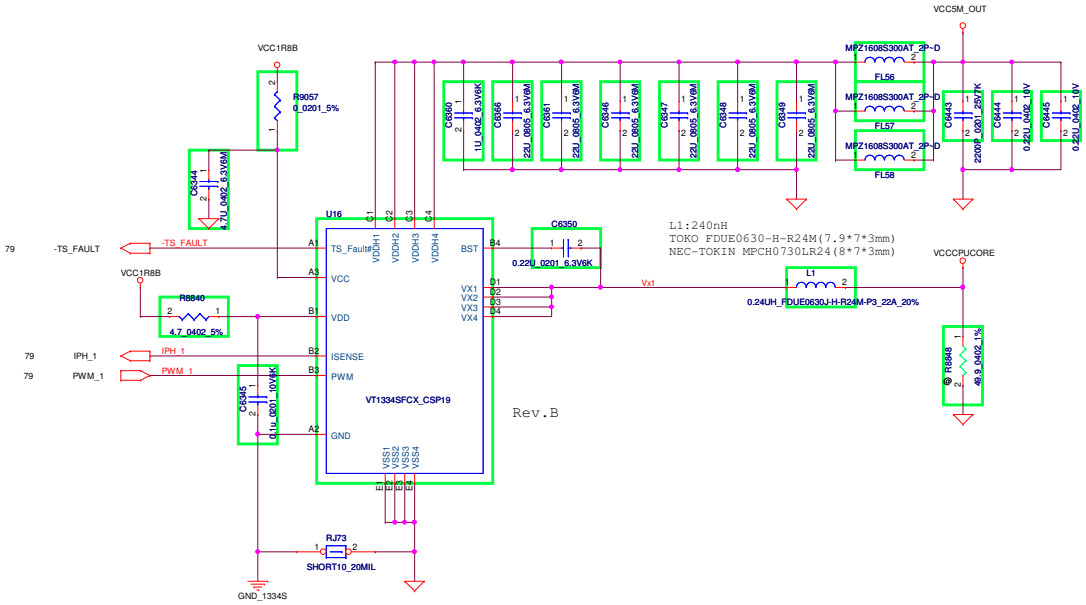

Security Classification	LC Future Center Secret Data		
Issued Date	2012/11/01	Deciphered Date	2013/12/31

THIS SHEET OF ENGINEERING DRAWING IS THE PROPRIETARY PROPERTY OF LC FUTURE CENTER, AND CONTAINS CONFIDENTIAL AND TRADE SECRET INFORMATION. THIS SHEET MAY NOT BE TRANSFERED FROM THE CUSTODY OF THE COMPETENT DIVISION OF R&D DEPARTMENT EXCEPT AS AUTHORIZED BY LC FUTURE CENTER NEITHER THIS SHEET NOR THE INFORMATION IT CONTAINS MAY BE USED BY OR DISCLOSED TO ANY THIRD PARTY WITHOUT PRIOR WRITTEN CONSENT OF LC FUTURE CENTER.

Title: *DC/DC VCCCPUCORE(VT1334S)*

Size: custom | Document Number: *Sting UMA* | Rev: 0.1

Date: Thursday, May 02, 2013 | Sheet 80 of 100

BLANK

Security Classification	LC Future Center Secret Data		
Issued Date	2012/11/01	Deciphered Date	2013/12/31

THIS SHEET OF ENGINEERING DRAWING IS THE PROPRIETARY PROPERTY OF LC FUTURE CENTER, AND CONTAINS CONFIDENTIAL AND TRADE SECRET INFORMATION. THIS SHEET MAY NOT BE TRANSFERED FROM THE CUSTODY OF THE COMPETENT DIVISION OF R&D DEPARTMENT EXCEPT AS AUTHORIZED BY LC FUTURE CENTER NEITHER THIS SHEET NOR THE INFORMATION IT CONTAINS MAY BE USED BY OR DISCLOSED TO ANY THIRD PARTY WITHOUT PRIOR WRITTEN CONSENT OF LC FUTURE CENTER.

Title

BLANK

Size	Document Number	Rev
Custom	**Sting UMA**	0.24

Date: Thursday, May 02, 2013 | Sheet 81 of 100

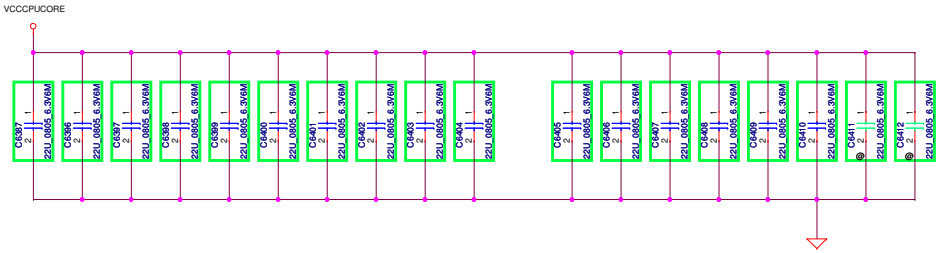

16pcs 22uF for VCCCPUCORE of 25W ULT CPU

(14pcs 22uF for VCCCPUCORE of 15W ULT CPU)

Security Classification	LC Future Center Secret Data		
Issued Date	2012/11/01	Deciphered Date	2013/12/31

THIS SHEET OF ENGINEERING DRAWING IS THE PROPRIETARY PROPERTY OF LC FUTURE CENTER, AND CONTAINS CONFIDENTIAL AND TRADE SECRET INFORMATION. THIS SHEET MAY NOT BE TRANSFERED FROM THE CUSTODY OF THE COMPETENT DIVISION OF R&D DEPARTMENT EXCEPT AS AUTHORIZED BY LC FUTURE CENTER NEITHER THIS SHEET NOR THE INFORMATION IT CONTAINS MAY BE USED BY OR DISCLOSED TO ANY THIRD PARTY WITHOUT PRIOR WRITTEN CONSENT OF LC FUTURE CENTER.

Title: **VCCCPUCORE DECOUPLING**

Size: Custom | Document Number: **Sting UMA** | Rev: 0.24

Date: Thursday, May 02, 2013 | Sheet 82 of 100

BLANK

Security Classification	LC Future Center Secret Data		
Issued Date	2012/11/01	Deciphered Date	2013/12/31

THIS SHEET OF ENGINEERING DRAWING IS THE PROPRIETARY PROPERTY OF LC FUTURE CENTER, AND CONTAINS CONFIDENTIAL AND TRADE SECRET INFORMATION. THIS SHEET MAY NOT BE TRANSFERED FROM THE CUSTODY OF THE COMPETENT DIVISION OF R&D DEPARTMENT EXCEPT AS AUTHORIZED BY LC FUTURE CENTER NEITHER THIS SHEET NOR THE INFORMATION IT CONTAINS MAY BE USED BY OR DISCLOSED TO ANY THIRD PARTY WITHOUT PRIOR WRITTEN CONSENT OF LC FUTURE CENTER.

Title: *BLANK*

Size: Custom | Document Number: ***Sting UMA*** | Rev: 0.24

Date: Thursday, May 02, 2013 | Sheet 83 of 100

BLANK

Security Classification	LC Future Center Secret Data		
Issued Date	2012/11/01	Deciphered Date	2013/12/31

THIS SHEET OF ENGINEERING DRAWING IS THE PROPRIETARY PROPERTY OF LC FUTURE CENTER, AND CONTAINS CONFIDENTIAL AND TRADE SECRET INFORMATION. THIS SHEET MAY NOT BE TRANSFERED FROM THE CUSTODY OF THE COMPETENT DIVISION OF R&D DEPARTMENT EXCEPT AS AUTHORIZED BY LC FUTURE CENTER NEITHER THIS SHEET NOR THE INFORMATION IT CONTAINS MAY BE USED BY OR DISCLOSED TO ANY THIRD PARTY WITHOUT PRIOR WRITTEN CONSENT OF LC FUTURE CENTER.

Title

BLANK

Size	Document Number	Rev
Custom	**Sting UMA**	0.24

Date: Thursday, May 02, 2013 | Sheet 84 of 100

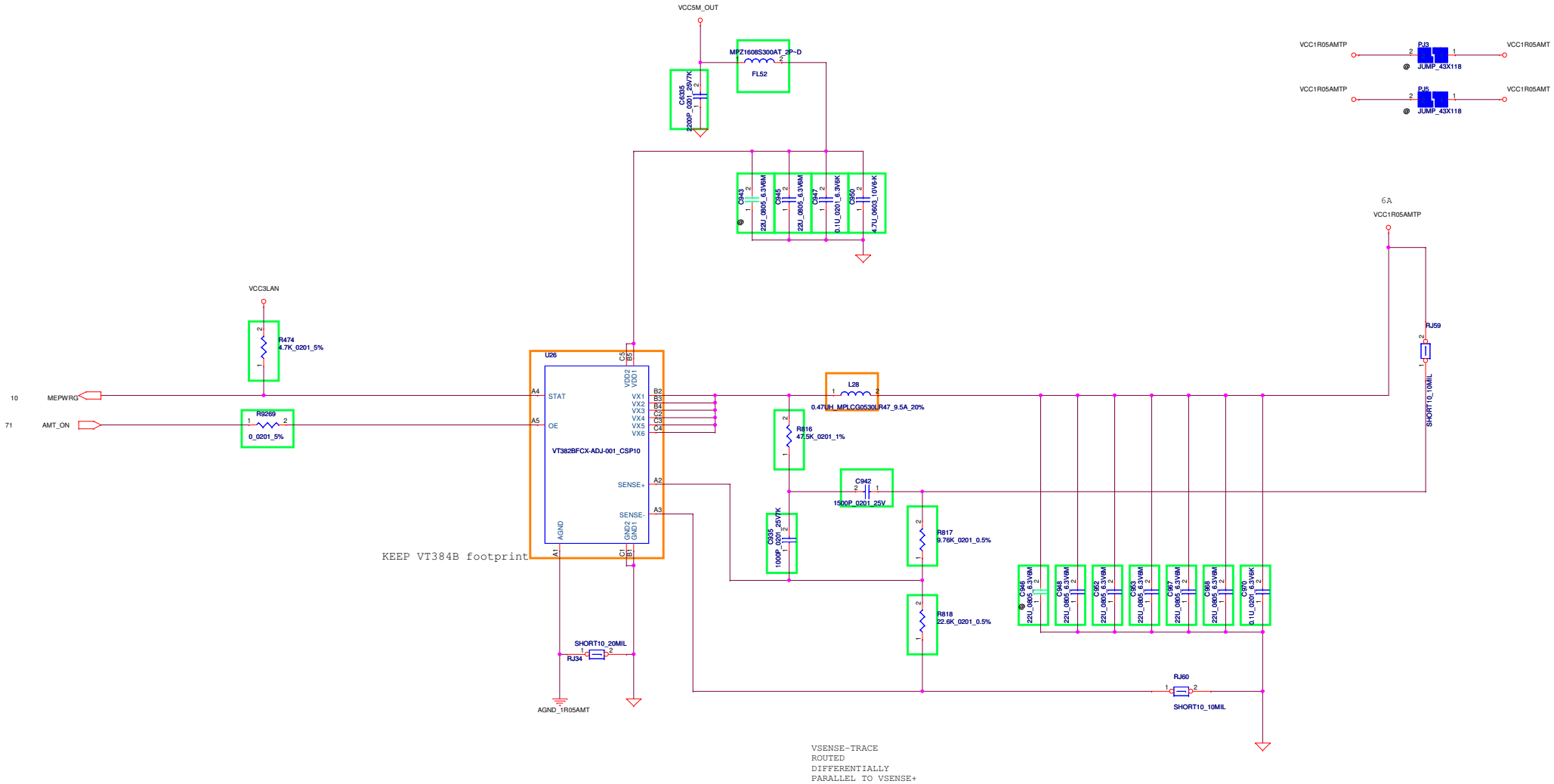

Vout = 0.75 x (1+R817/R818)

Security Classification	LC Future Center Secret Data		
Issued Date	2012/11/01	Deciphered Date	2013/12/31

THIS SHEET OF ENGINEERING DRAWING IS THE PROPRIETARY PROPERTY OF LC FUTURE CENTER, AND CONTAINS CONFIDENTIAL AND TRADE SECRET INFORMATION. THIS SHEET MAY NOT BE TRANSFERED FROM THE CUSTODY OF THE COMPETENT DIVISION OF R&D DEPARTMENT EXCEPT AS AUTHORIZED BY LC FUTURE CENTER NEITHER THIS SHEET NOR THE INFORMATION IT CONTAINS MAY BE USED BY OR DISCLOSED TO ANY THIRD PARTY WITHOUT PRIOR WRITTEN CONSENT OF LC FUTURE CENTER.

Title: DC/DC VCC1R05AMT(VT384)

Size: custom | Document Number: Sting UMA | Rev: 0.24

Date: Thursday, May 02, 2013 | Sheet 85 of 100

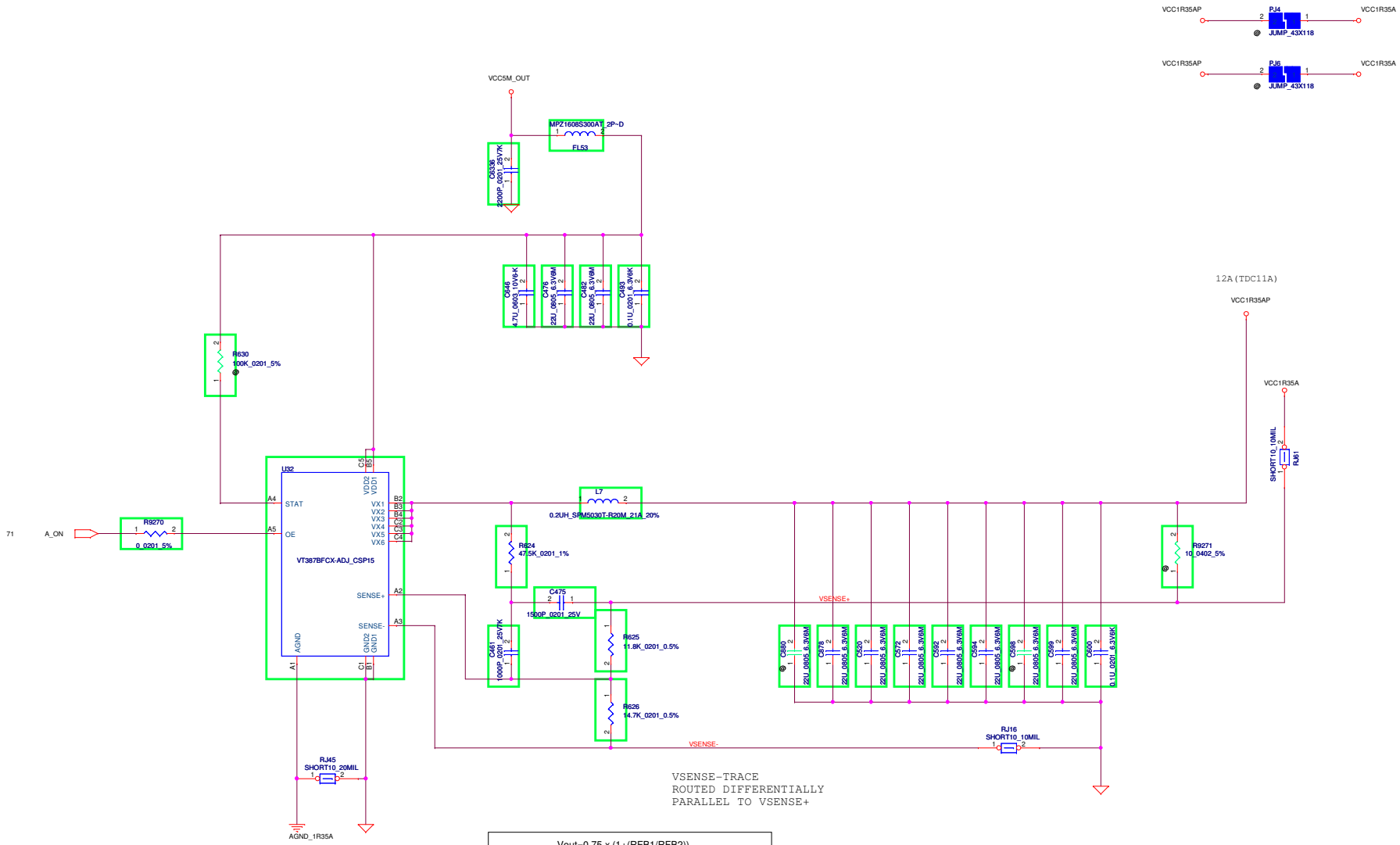

Vout=0.75 x (1+(RFB1/RFB2))

RF1	RF2
R625	R626
3.65K	4.53K for 1.35V
4.02K	4.02K for 1.50V

Security Classification	LC Future Center Secret Data		
Issued Date	2012/11/01	Deciphered Date	2013/12/31

THIS SHEET OF ENGINEERING DRAWING IS THE PROPRIETARY PROPERTY OF LC FUTURE CENTER, AND CONTAINS CONFIDENTIAL AND TRADE SECRET INFORMATION. THIS SHEET MAY NOT BE TRANSFERED FROM THE CUSTODY OF THE COMPETENT DIVISION OF R&D DEPARTMENT EXCEPT AS AUTHORIZED BY LC FUTURE CENTER NEITHER THIS SHEET NOR THE INFORMATION IT CONTAINS MAY BE USED BY OR DISCLOSED TO ANY THIRD PARTY WITHOUT PRIOR WRITTEN CONSENT OF LC FUTURE CENTER.

Title: DC/DC VCC1R35A(VT387)

Size: custom | Document Number: Sting UMA | Rev: 0.24

Date: Thursday, May 02, 2013 | Sheet 86 of 100

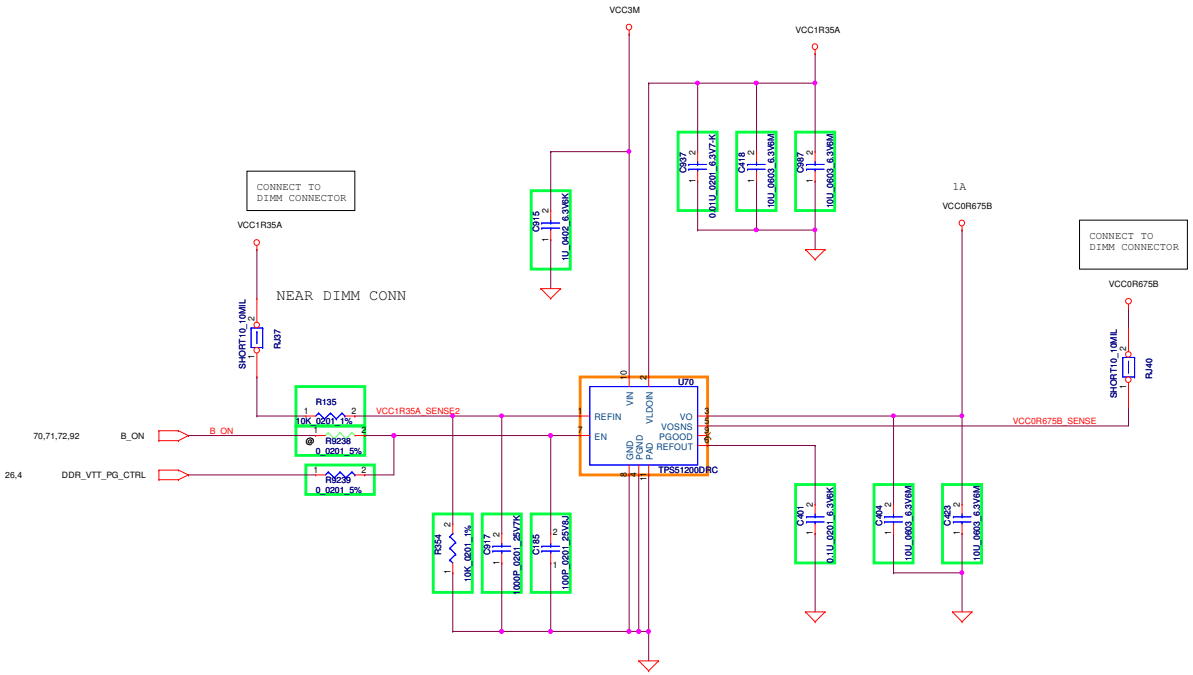

Security Classification	LC Future Center Secret Data		
Issued Date	2012/11/01	Deciphered Date	2013/12/31

THIS SHEET OF ENGINEERING DRAWING IS THE PROPRIETARY PROPERTY OF LC FUTURE CENTER, AND CONTAINS CONFIDENTIAL AND TRADE SECRET INFORMATION. THIS SHEET MAY NOT BE TRANSFERED FROM THE CUSTODY OF THE COMPETENT DIVISION OF R&D DEPARTMENT EXCEPT AS AUTHORIZED BY LC FUTURE CENTER NEITHER THIS SHEET NOR THE INFORMATION IT CONTAINS MAY BE USED BY OR DISCLOSED TO ANY THIRD PARTY WITHOUT PRIOR WRITTEN CONSENT OF LC FUTURE CENTER.

Title: *DC/DC VCC0R675B(TPS51200)*

Size: custom | Document Number: *Sting UMA* | Rev: 0.24

Date: Thursday, May 02, 2013 | Sheet 87 of 100

BLANK

Security Classification	LC Future Center Secret Data		
Issued Date	2012/11/01	Deciphered Date	2013/12/31

THIS SHEET OF ENGINEERING DRAWING IS THE PROPRIETARY PROPERTY OF LC FUTURE CENTER, AND CONTAINS CONFIDENTIAL AND TRADE SECRET INFORMATION. THIS SHEET MAY NOT BE TRANSFERED FROM THE CUSTODY OF THE COMPETENT DIVISION OF R&D DEPARTMENT EXCEPT AS AUTHORIZED BY LC FUTURE CENTER NEITHER THIS SHEET NOR THE INFORMATION IT CONTAINS MAY BE USED BY OR DISCLOSED TO ANY THIRD PARTY WITHOUT PRIOR WRITTEN CONSENT OF LC FUTURE CENTER.

Title

BLANK

Size	Document Number	Rev
Custom	**Sting UMA**	0.24

Date: Thursday, May 02, 2013 | Sheet 88 of 100

BLANK

Security Classification	LC Future Center Secret Data		
Issued Date	2012/11/01	Deciphered Date	2013/12/31

THIS SHEET OF ENGINEERING DRAWING IS THE PROPRIETARY PROPERTY OF LC FUTURE CENTER, AND CONTAINS CONFIDENTIAL AND TRADE SECRET INFORMATION. THIS SHEET MAY NOT BE TRANSFERED FROM THE CUSTODY OF THE COMPETENT DIVISION OF R&D DEPARTMENT EXCEPT AS AUTHORIZED BY LC FUTURE CENTER NEITHER THIS SHEET NOR THE INFORMATION IT CONTAINS MAY BE USED BY OR DISCLOSED TO ANY THIRD PARTY WITHOUT PRIOR WRITTEN CONSENT OF LC FUTURE CENTER.

Title: *BLANK*

Size: Custom | Document Number: ***Sting UMA*** | Rev: 0.24

Date: Thursday, May 02, 2013 | Sheet 89 of 100

BLANK

Security Classification	LC Future Center Secret Data		
Issued Date	2012/11/01	Deciphered Date	2013/12/31

THIS SHEET OF ENGINEERING DRAWING IS THE PROPRIETARY PROPERTY OF LC FUTURE CENTER, AND CONTAINS CONFIDENTIAL AND TRADE SECRET INFORMATION. THIS SHEET MAY NOT BE TRANSFERED FROM THE CUSTODY OF THE COMPETENT DIVISION OF R&D DEPARTMENT EXCEPT AS AUTHORIZED BY LC FUTURE CENTER NEITHER THIS SHEET NOR THE INFORMATION IT CONTAINS MAY BE USED BY OR DISCLOSED TO ANY THIRD PARTY WITHOUT PRIOR WRITTEN CONSENT OF LC FUTURE CENTER.

Title
BLANK

Size	Document Number	Rev
Custom	**Sting UMA**	0.24

Date: Thursday, May 02, 2013 | Sheet 90 of 100

BLANK

Security Classification	LC Future Center Secret Data		
Issued Date	2012/11/01	Deciphered Date	2013/12/31

THIS SHEET OF ENGINEERING DRAWING IS THE PROPRIETARY PROPERTY OF LC FUTURE CENTER, AND CONTAINS CONFIDENTIAL AND TRADE SECRET INFORMATION. THIS SHEET MAY NOT BE TRANSFERED FROM THE CUSTODY OF THE COMPETENT DIVISION OF R&D DEPARTMENT EXCEPT AS AUTHORIZED BY LC FUTURE CENTER NEITHER THIS SHEET NOR THE INFORMATION IT CONTAINS MAY BE USED BY OR DISCLOSED TO ANY THIRD PARTY WITHOUT PRIOR WRITTEN CONSENT OF LC FUTURE CENTER.

Title

BLANK

Size	Document Number	Rev
Custom	**Sting UMA**	0.24

Date: Thursday, May 02, 2013 | Sheet 91 of 100

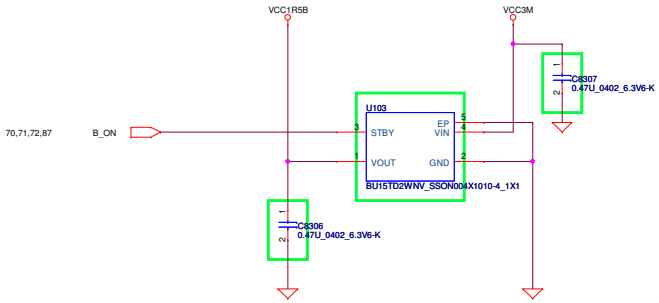

Security Classification	LC Future Center Secret Data		
Issued Date	2012/11/01	Deciphered Date	2013/12/31

THIS SHEET OF ENGINEERING DRAWING IS THE PROPRIETARY PROPERTY OF LC FUTURE CENTER, AND CONTAINS CONFIDENTIAL AND TRADE SECRET INFORMATION. THIS SHEET MAY NOT BE TRANSFERED FROM THE CUSTODY OF THE COMPETENT DIVISION OF R&D DEPARTMENT EXCEPT AS AUTHORIZED BY LC FUTURE CENTER NEITHER THIS SHEET NOR THE INFORMATION IT CONTAINS MAY BE USED BY OR DISCLOSED TO ANY THIRD PARTY WITHOUT PRIOR WRITTEN CONSENT OF LC FUTURE CENTER.

Title: DC/DC VCC1R5B(BU15TD2WNVX)

Size: Custom | Document Number: Sting UMA | Rev: 0.24

Date: Thursday, May 02, 2013 | Sheet 92 of 100

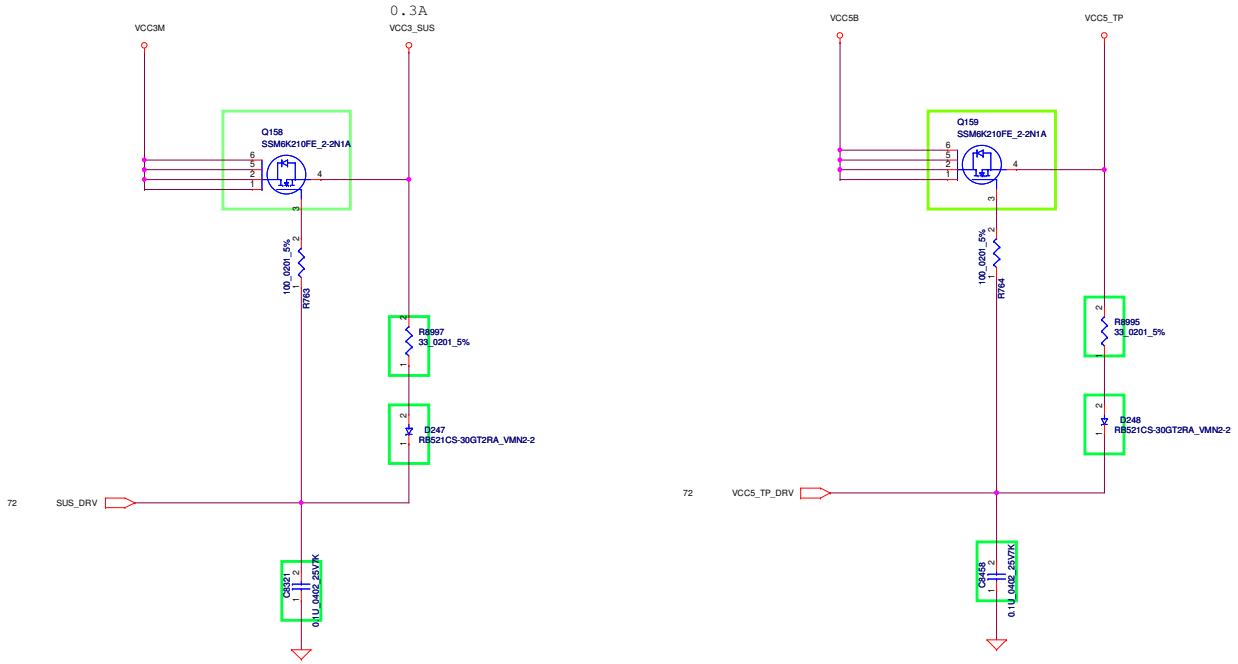

Security Classification	LC Future Center Secret Data		
Issued Date	2012/11/01	Deciphered Date	2013/12/31

THIS SHEET OF ENGINEERING DRAWING IS THE PROPRIETARY PROPERTY OF LC FUTURE CENTER, AND CONTAINS CONFIDENTIAL AND TRADE SECRET INFORMATION. THIS SHEET MAY NOT BE TRANSFERED FROM THE CUSTODY OF THE COMPETENT DIVISION OF R&D DEPARTMENT EXCEPT AS AUTHORIZED BY LC FUTURE CENTER NEITHER THIS SHEET NOR THE INFORMATION IT CONTAINS MAY BE USED BY OR DISCLOSED TO ANY THIRD PARTY WITHOUT PRIOR WRITTEN CONSENT OF LC FUTURE CENTER.

Title

LOAD SW PCH SUS

Size: Custom | Document Number: **Sting UMA** | Rev: 0.24

Date: Thursday, May 02, 2013 | Sheet 93 of 100

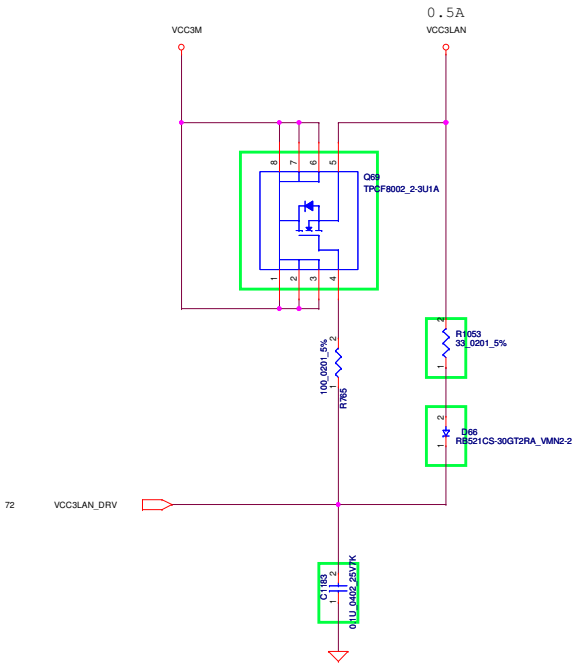

Security Classification	LC Future Center Secret Data		
Issued Date	2012/11/01	Deciphered Date	2013/12/31

THIS SHEET OF ENGINEERING DRAWING IS THE PROPRIETARY PROPERTY OF LC FUTURE CENTER, AND CONTAINS CONFIDENTIAL AND TRADE SECRET INFORMATION. THIS SHEET MAY NOT BE TRANSFERED FROM THE CUSTODY OF THE COMPETENT DIVISION OF R&D DEPARTMENT EXCEPT AS AUTHORIZED BY LC FUTURE CENTER NEITHER THIS SHEET NOR THE INFORMATION IT CONTAINS MAY BE USED BY OR DISCLOSED TO ANY THIRD PARTY WITHOUT PRIOR WRITTEN CONSENT OF LC FUTURE CENTER.

Title: **LOAD SW LAN**

Size: Custom | Document Number: **Sting UMA** | Rev: 0.24

Date: Thursday, May 02, 2013 | Sheet 94 of 100

BLANK

Security Classification	LC Future Center Secret Data		
Issued Date	2012/11/01	Deciphered Date	2013/12/31

THIS SHEET OF ENGINEERING DRAWING IS THE PROPRIETARY PROPERTY OF LC FUTURE CENTER, AND CONTAINS CONFIDENTIAL AND TRADE SECRET INFORMATION. THIS SHEET MAY NOT BE TRANSFERED FROM THE CUSTODY OF THE COMPETENT DIVISION OF R&D DEPARTMENT EXCEPT AS AUTHORIZED BY LC FUTURE CENTER NEITHER THIS SHEET NOR THE INFORMATION IT CONTAINS MAY BE USED BY OR DISCLOSED TO ANY THIRD PARTY WITHOUT PRIOR WRITTEN CONSENT OF LC FUTURE CENTER.

Title

BLANK

Size	Document Number	Rev
Custom	**Sting UMA**	0.24

Date: Thursday, May 02, 2013 | Sheet 95 of 100

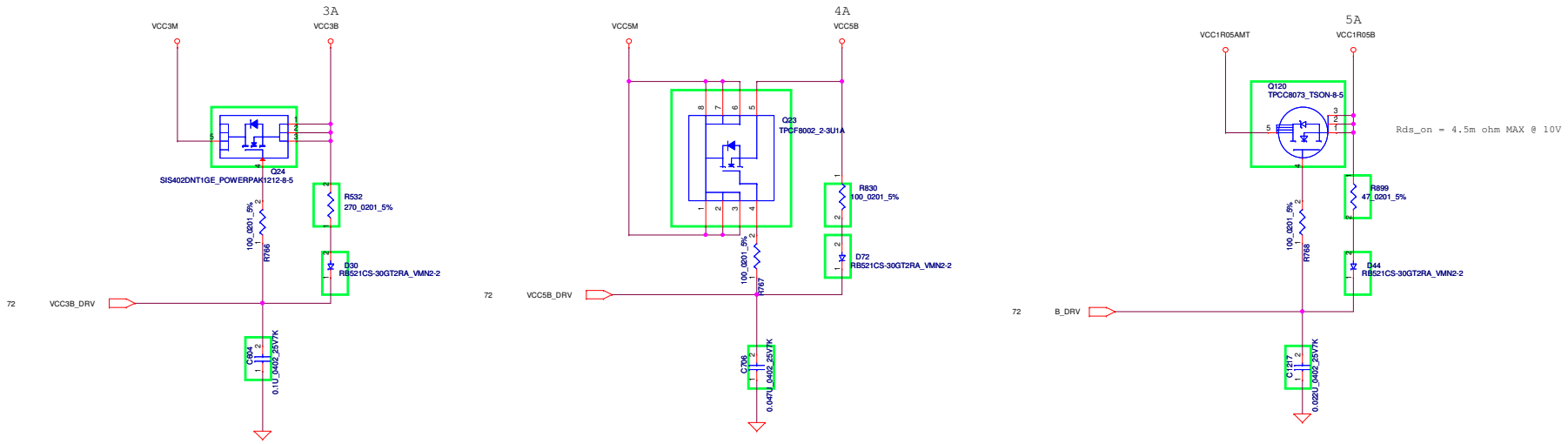

Security Classification	LC Future Center Secret Data		
Issued Date	2012/11/01	Deciphered Date	2013/12/31

THIS SHEET OF ENGINEERING DRAWING IS THE PROPRIETARY PROPERTY OF LC FUTURE CENTER, AND CONTAINS CONFIDENTIAL AND TRADE SECRET INFORMATION. THIS SHEET MAY NOT BE TRANSFERED FROM THE CUSTODY OF THE COMPETENT DIVISION OF R&D DEPARTMENT EXCEPT AS AUTHORIZED BY LC FUTURE CENTER NEITHER THIS SHEET NOR THE INFORMATION IT CONTAINS MAY BE USED BY OR DISCLOSED TO ANY THIRD PARTY WITHOUT PRIOR WRITTEN CONSENT OF LC FUTURE CENTER.

Title

LOAD SW B

Size	Document Number	Rev
Custom	**Sting UMA**	0.24

Date: Thursday, May 02, 2013 | Sheet 96 of 100

BLANK

Security Classification	LC Future Center Secret Data		
Issued Date	2012/11/01	Deciphered Date	2013/12/31

THIS SHEET OF ENGINEERING DRAWING IS THE PROPRIETARY PROPERTY OF LC FUTURE CENTER, AND CONTAINS CONFIDENTIAL AND TRADE SECRET INFORMATION. THIS SHEET MAY NOT BE TRANSFERED FROM THE CUSTODY OF THE COMPETENT DIVISION OF R&D DEPARTMENT EXCEPT AS AUTHORIZED BY LC FUTURE CENTER NEITHER THIS SHEET NOR THE INFORMATION IT CONTAINS MAY BE USED BY OR DISCLOSED TO ANY THIRD PARTY WITHOUT PRIOR WRITTEN CONSENT OF LC FUTURE CENTER.

Title

BLANK

Size	Document Number	Rev
Custom	**Sting UMA**	0.24

Date: Thursday, May 02, 2013 | Sheet 97 of 100

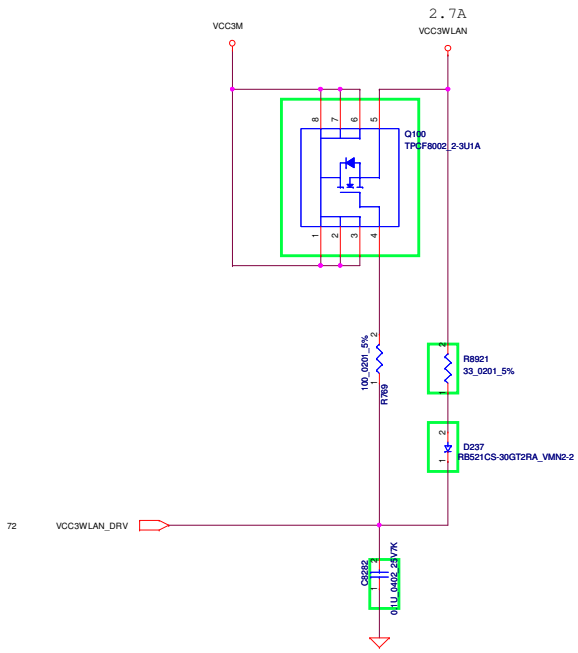

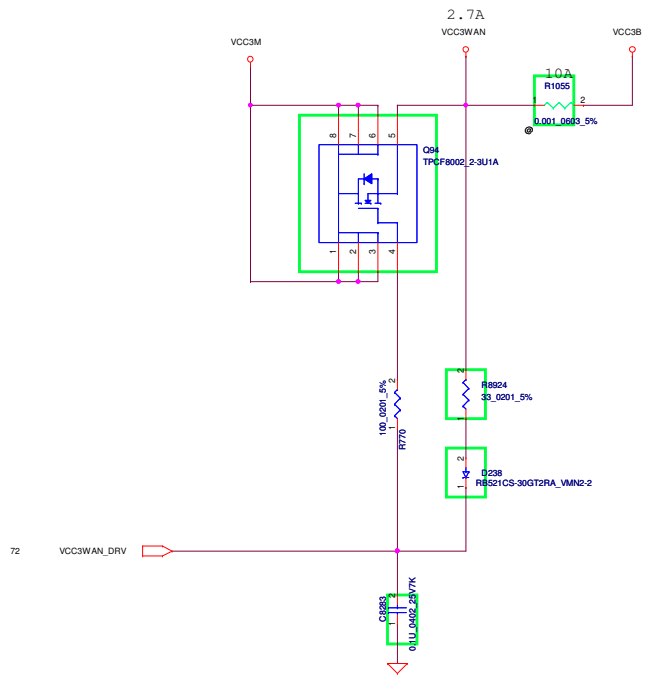

TABLE

AOAC	YES	NO
R1055	NO-ASM	ASM
Q94	ASM	NO-ASM
R8924	ASM	NO-ASM
R8926	ASM	NO-ASM
C8283	ASM	NO-ASM
D238	ASM	NO-ASM

LOGIC

Security Classification	LC Future Center Secret Data			Title
Issued Date	2012/11/01	Deciphered Date	2013/12/31	LOAD SW WWAN & WLAN

THIS SHEET OF ENGINEERING DRAWING IS THE PROPRIETARY PROPERTY OF LC FUTURE CENTER, AND CONTAINS CONFIDENTIAL AND TRADE SECRET INFORMATION. THIS SHEET MAY NOT BE TRANSFERED FROM THE CUSTODY OF THE COMPETENT DIVISION OF R&D DEPARTMENT EXCEPT AS AUTHORIZED BY LC FUTURE CENTER NEITHER THIS SHEET NOR THE INFORMATION IT CONTAINS MAY BE USED BY OR DISCLOSED TO ANY THIRD PARTY WITHOUT PRIOR WRITTEN CONSENT OF LC FUTURE CENTER.

Size	Document Number	Rev
Custom	Sting UMA	0.24

Date: Thursday, May 02, 2013 Sheet 98 of 100

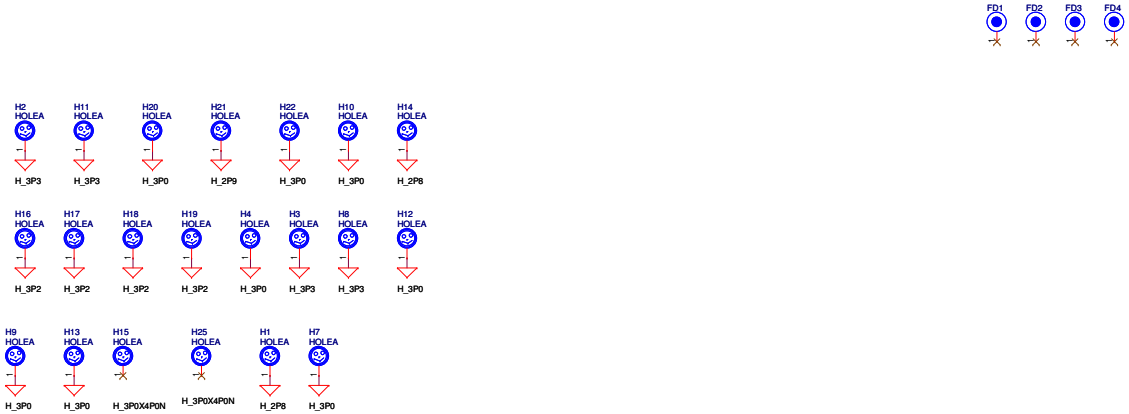

lenovo

Project Name : STING UMA	Title : PTH FOR SCREW HOLES	
Size : C	Document Number :	Rev : 0.1
Date: Thursday, May 02, 2013	Sheet : 99 of 100	

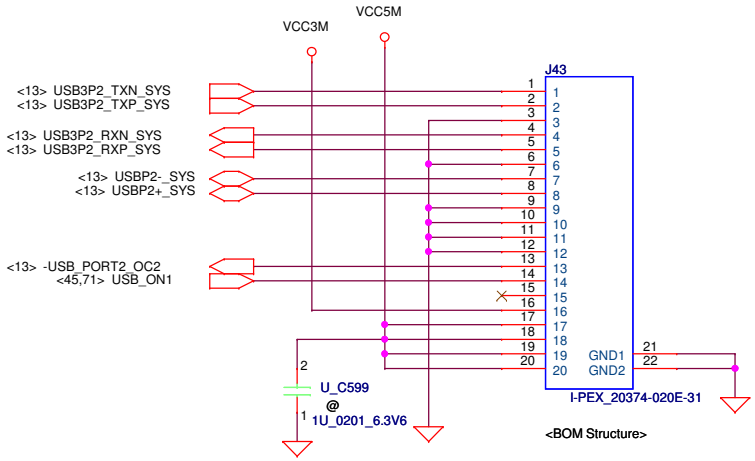

Security Classification	LC Future Center Secret Data		
Issued Date	2012/05/01	Deciphered Date	2012/12/01

THIS SHEET OF ENGINEERING DRAWING IS THE PROPRIETARY PROPERTY OF LC FUTURE CENTER. AND CONTAINS CONFIDENTIAL AND TRADE SECRET INFORMATION. THIS SHEET MAY NOT BE TRANSFERED FROM THE CUSTODY OF THE COMPETENT DIVISION OF R&D DEPARTMENT EXCEPT AS AUTHORIZED BY LC FUTURE CENTER NEITHER THIS SHEET NOR THE INFORMATION IT CONTAINS MAY BE USED BY OR DISCLOSED TO ANY THIRD PARTY WITHOUT PRIOR WRITTEN CONSENT OF LC FUTURE CENTER.

Title: *3rd USB3.0 CONN*

Size: B | Document Number: *STING UMA* | Rev: 0.1

Date: Thursday, May 02, 2013 | Sheet 100 of 100